Lecture Slides

Chapter 16

Clutches, Brakes, Couplings, and Flywheels

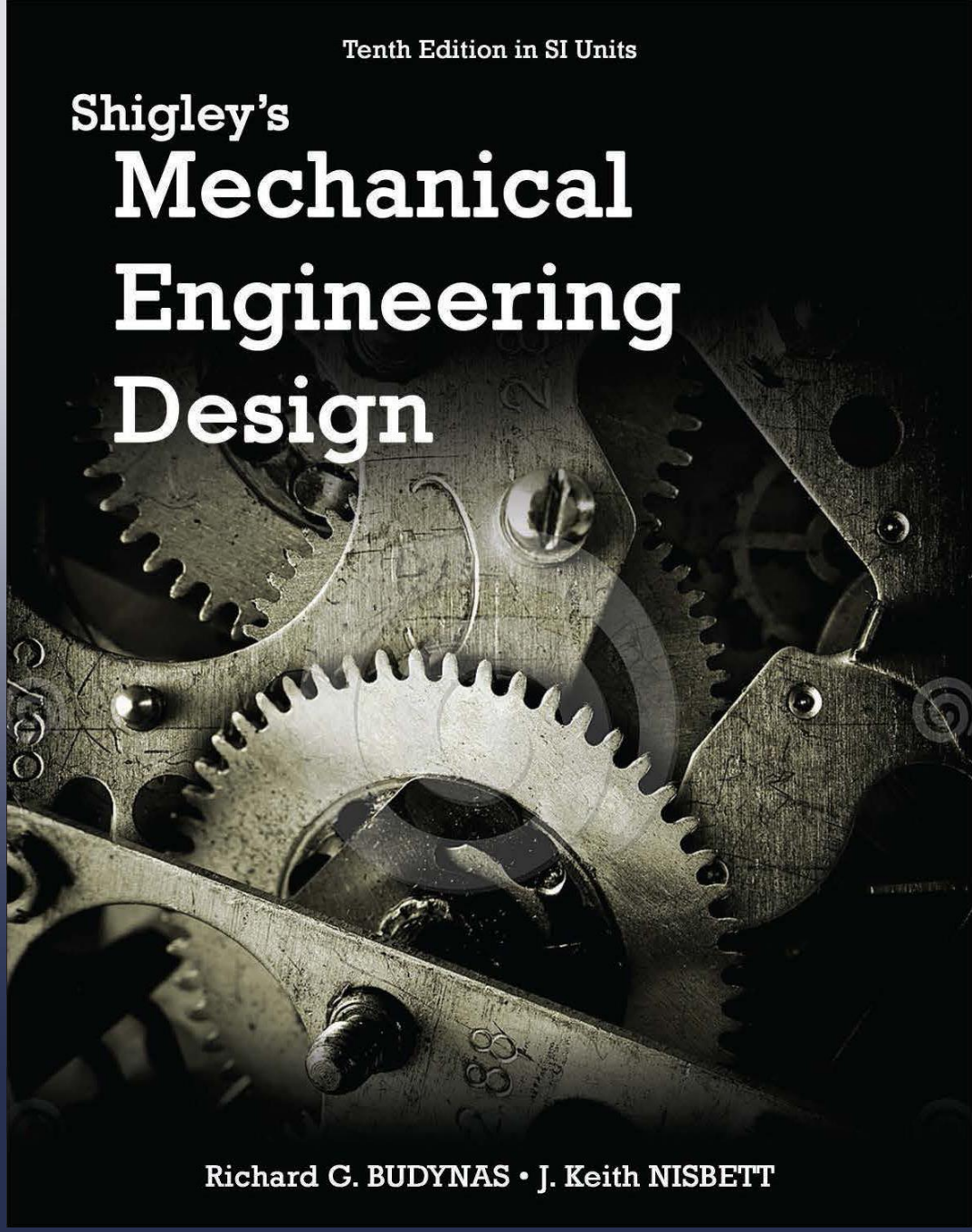

© 2015 by McGraw-Hill Education. This is proprietary material solely for authorized instructor use. Not authorized for sale or distribution in any manner. This document may not be copied, scanned, duplicated, forwarded, distributed, or posted on a website, in whole or part.

Chapter Outline

16–1	Static Analysis of Clutches and Brakes	819
16–2	Internal Expanding Rim Clutches and Brakes	824
16–3	External Contracting Rim Clutches and Brakes	832
16–4	Band-Type Clutches and Brakes	836
16–5	Frictional-Contact Axial Clutches	837
16–6	Disk Brakes	841
16–7	Cone Clutches and Brakes	845
16–8	Energy Considerations	848
16–9	Temperature Rise	849
16–10	Friction Materials	853
16–11	Miscellaneous Clutches and Couplings	856
16–12	Flywheels	858

Model of Clutch

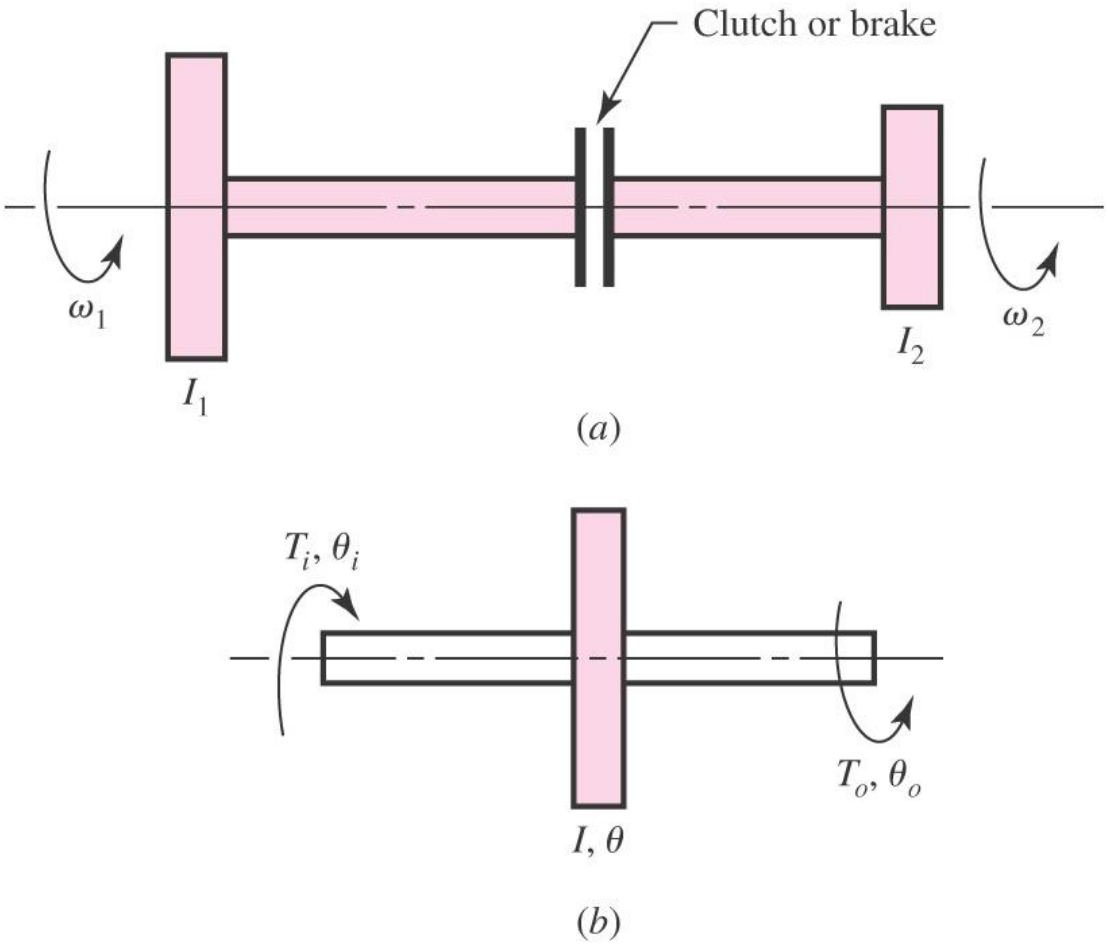

Fig. 16–1

Friction Analysis of a Doorstop

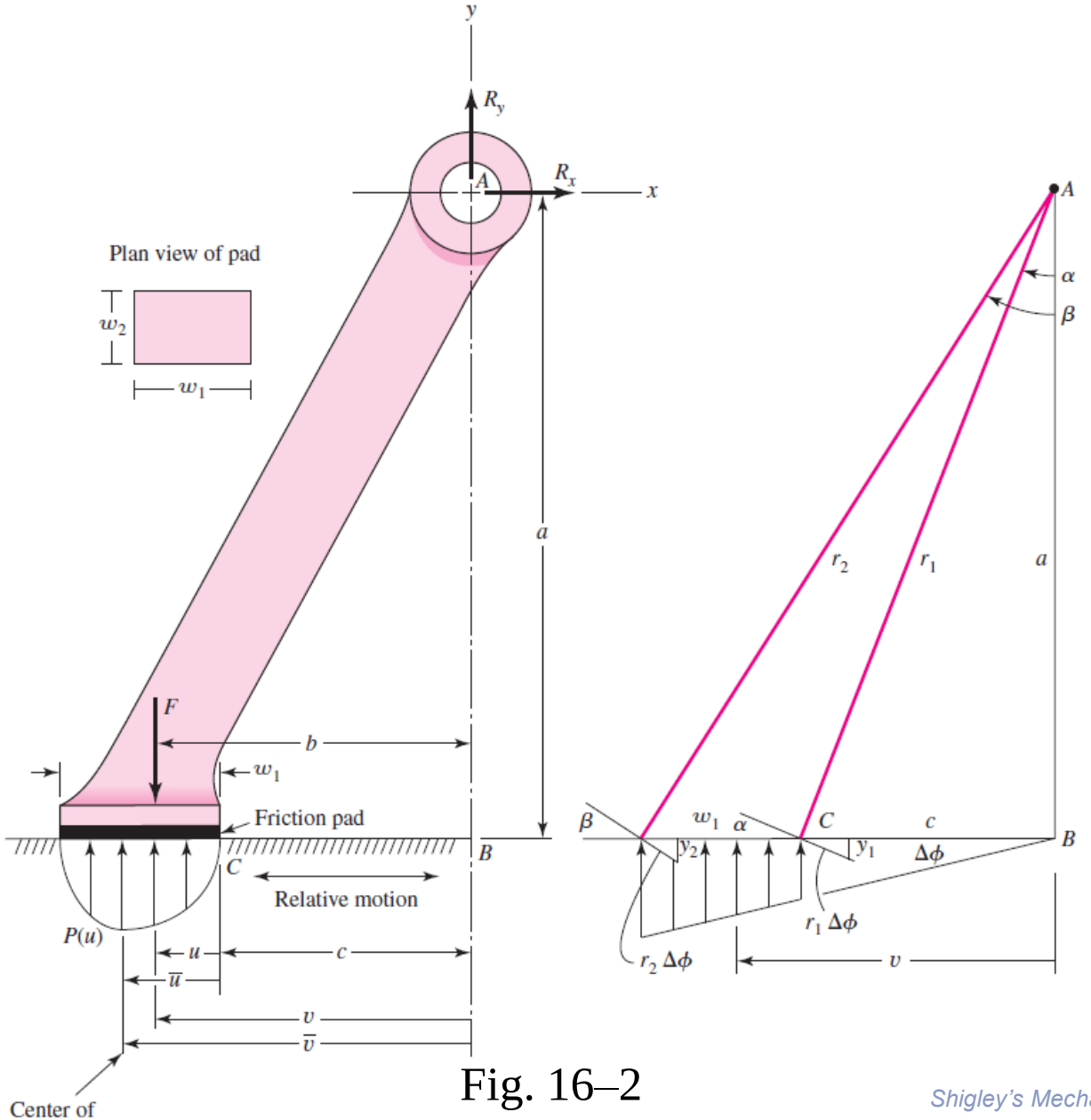

Fig. 16–2

Friction Analysis of a Doorstop

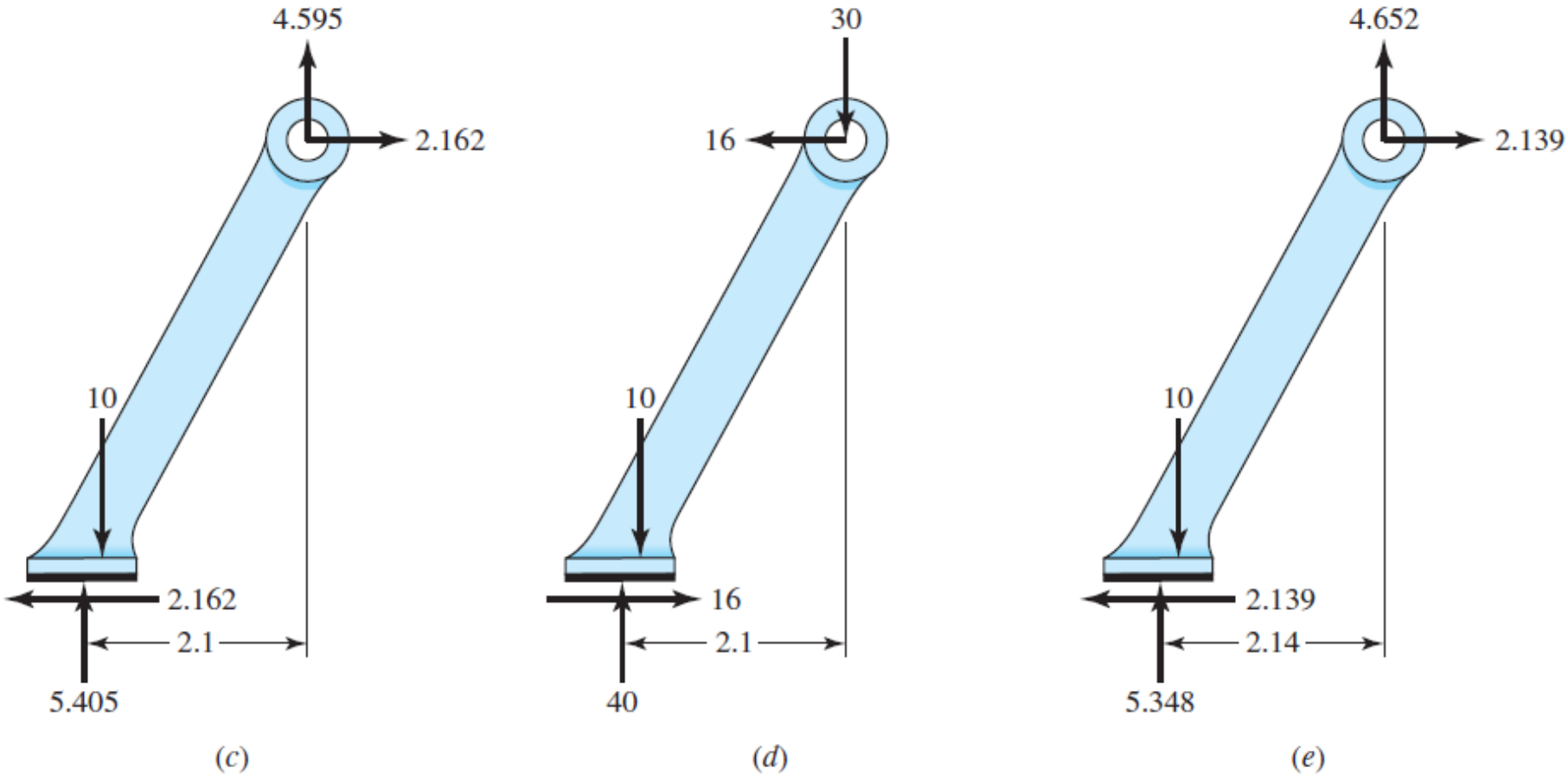

Fig. 16–2

Friction Analysis of a Doorstop

$$N = w_2 \int_0^{w_1} p(u)\,du = p_{\text{av}} w_1 w_2 \qquad (a)$$

$$w_2 \int_0^{w_1} p(u) u\,du = \bar{u} w_2 \int_0^{w_1} p(u)\,du = p_{\text{av}} w_1 w_2 \bar{u} \qquad (b)$$

$$\sum F_x = R_x \mp w_2 \int_0^{w_1} f p(u)\,du = 0$$

$$R_x = \pm w_2 \int_0^{w_1} f p(u)\,du = \pm f w_1 w_2 p_{\text{av}} \qquad (c)$$

$$\sum F_y = -F + w_2 \int_0^{w_1} p(u)\,du + R_y = 0$$

$$R_y = F - w_2 \int_0^{w_1} p(u)\,du = F - p_{\text{av}} w_1 w_2 \qquad (d)$$

Friction Analysis of a Doorstop

$$\sum M_A = Fb - w_2 \int_0^{w_1} p(u)(c+u)\,du \mp af w_2 \int_0^{w_1} p(u)\,du = 0$$

$$F = \frac{w_2}{b}\left[\int_0^{w_1} p(u)(c+u)\,du \pm af \int_0^{w_1} p(u)\,du\right] \qquad \text{(e)}$$

$$\int_0^{w_1} p(u)(c+u)\,du - af \int_0^{w_1} p(u)\,du \le 0$$

$$f_{cr} \ge \frac{1}{a}\frac{\int_0^{w_1} p(u)(c+u)\,du}{\int_0^{w_1} p(u)\,du} = \frac{1}{a}\frac{c\int_0^{w_1} p(u)\,du + \int_0^{w_1} p(u)u\,du}{\int_0^{w_1} p(u)\,du}$$

$$f_{cr} \ge \frac{c+\bar{u}}{a} \qquad \text{(f)}$$

Example 16–1

The doorstop depicted in Fig. 16–2a has the following dimensions: $a = 100$ mm, $b = 50$ mm, $c = 40$ mm, $w_1 = 25$ mm, $w_2 = 18$ mm, where w_2 is the depth of the pad into the plane of the paper.

(a) For a leftward relative movement of the floor, an actuating force F of 45 N, a coefficient of friction of 0.4, use a uniform pressure distribution p_{av}, find R_x, R_y, p_{av}, and the largest pressure p_a.

(b) Repeat part a for rightward relative movement of the floor.

(c) Model the normal pressure to be the "crush" of the pad, much as if it were composed of many small helical coil springs. Find R_x, R_y, p_{av}, and p_a for leftward relative movement of the floor and other conditions as in part a.

(d) For rightward relative movement of the floor, is the doorstop a self-acting brake?

Example 16–1

Solution

(*a*)

Eq. (*c*): $R_x = f p_{av} w_1 w_2 = 0.4(25)18\, p_{av} = 180\, p_{av}$

Eq. (*d*): $R_y = F - p_{av} w_1 w_2 = 45 - p_{av}(25)(18) = 45 - 450\, p_{av}$

Eq. (*e*):

$$F = \frac{w_2}{b}\left[\int_0^{25} p_{av}(c+u)\,du + af\int_0^{25} p_{av}\,du\right]$$

$$= \frac{w_2}{b}\left(p_{av}c\int_0^{25} du + p_{av}\int_0^{25} u\,du + afp_{av}\int_0^{25} du\right)$$

$$= \frac{w_2 p_{av}}{b}\left(25c + \frac{25^2}{2} + 25af\right)$$

$$= 832.5\, p_{av}$$

Example 16–1

Solving for p_{av} gives

$$p_{\text{av}} = \frac{F}{922.5} = \frac{45}{832.5} = 0.054 \text{ MPa}$$

We evaluate R_x and R_y as

$$R_x = 180(0.054) = 9.7 \text{ N}$$

$$R_y = 45 - 450(0.05) = 20.7 \text{ N}$$

The normal force N on the pad is $F - R_y = 45 - 22.5 = 24.3$ N, upward. The line of action is through the center of pressure, which is at the center of the pad..The friction force is $fN = 0.4(24.3) = 9.7$ N directed to the left. A check of the moments about A gives

$$\sum M_A = Fb - fNa - N(w_1/2 + c)$$

$$= 45(50) - 0.4(24.3)100 - 24.3(25/2 + 40) = 0$$

The maximum pressure $p_a = p_{av} = 0.054$ MPa.

Example 16–1

(*b*)

Eq. (*c*): $$R_x = -f p_{av} w_1 w_2 = -0.4(25)(18)\, p_{av} = -180\, p_{av}$$

Eq. (*d*): $$R_y = F - p_{av} w_1 w_2 = 45 - p_{av}(25)(18) = 45 - 450\, p_{av}$$

Eq. (*e*): $$F = \frac{w_2}{b}\left[\int_0^{25} p_{av}(c+u)\,du - af\int_0^{25} p_{av}\,du\right]$$

$$= \frac{w_2}{b}\left(p_{av}c\int_0^{25} du + p_{av}\int_0^{25} u\,du - af p_{av}\int_0^{25} du\right)$$

$$= 112.5\, p_{av}$$

from which

$$p_{av} = \frac{F}{112.5} = \frac{45}{112.5} = 0.4 \text{ MPa}$$

Example 16–1

which makes

$$R_x = -180(0.4) = 72 \text{ N}$$

$$R_y = 45 - 450(0.4) = -135 \text{ N}$$

The normal force N on the pad is $45 + 135 = 180$ N upward. The friction shearing force is $fN = 0.4(180) = 72$ N to the right. We now check the moments about A:

$$M_A = fNa + Fb - N(c + 0.5) = 72(100) + 45(50) - 180(40 + 12.5) = 0$$

Note the change in average pressure from 0.05 MPa in part a to 0.4 MPa. Also note how directions of forces have changed. The maximum pressure p_a is the same as p_{av}, which has changed from 0.05 MPa to 0.4 MPa.

Example 16–1

(c) We will model the deformation of the pad as follows. If the doorstop rotates $\Delta\phi$ counterclockwise, the right and left edges of the pad will deform down y_1 and y_2, respectively (Fig. 16–2b). From similar triangles, $y_1/(r_1\ \Delta\phi) = c/r_1$ and $y_2/(r_2\ \Delta\phi) = (c + w_1)/r_2$. Thus, $y_1 = c\ \Delta\phi$ and $y_2 = (c + w_1)\ \Delta\phi$. This means that y is directly proportional to the horizontal distance from the pivot point A; that is, $y = C_1 v$, where

C_1 is a constant (see Fig. 16–2b). Assuming the pressure is directly proportional to deformation, then $p(v) = C_2 v$, where C_2 is a constant. In terms of u, the pressure is $p(u) = C_2(c + u) = C_2(40 + u)$.

Eq. (e):

$$F = \frac{w_2}{b}\left[\int_0^{w_1} p(u)c\,du + \int_0^{w_1} p(u)u\,du + af\int_0^{w_1} p(u)\,du\right]$$

$$= \frac{18}{50}\left[\int_0^{25} C_2(40+u)40du + \int_0^{25} C_2(40+u)u\,du + af\int_0^{25} C_2(40+u)du\right]$$

$$= 0.36C_2[1600(25) + 40(25)^2 + (25)^3/2 + 100(0.4)(40(25) - (25)^2/2)]$$

$$= 33\,592.5C_2$$

Example 16–1

Since $F = 45$ N, then $C_2 = 45/33\ 592.5 = 0.001\ 34$ MPa/mm, and $p(u) = 0.001\ 34\ (40 + u)$. The average pressure is given by

$$p_{\text{av}} = \frac{1}{w_1}\int_0^{w_1} p(u)\,du = \frac{1}{25}\int_0^{25} 0.001\ 34(40 + u)du = 0.001\ 34(40 + 12.5) = 0.07\ \text{MPa}$$

The maximum pressure occurs at $u = 25$ mm, and is

$$p_a = 0.001\ 34(40 + 25) = 0.087\ \text{MPa}$$

Equations (c) and (d) of Sec. 16–1 are still valid. Thus,

$$R_x = 180\ p_{\text{av}} = 180(0.07) = 12.6\ \text{N}$$

$$R_y = 45 - 450\ p_{\text{av}} = 45 - 450(0.07) = 13.5\ \text{N}$$

Example 16–1

The average pressure is $p_{\text{av}} = 0.07$ MPa and the maximum pressure is $p_a = 0.087$ MPa, which is approximately 24 percent higher than the average pressure. The presumption that the pressure was uniform in part a (because the pad was small, or because the arithmetic would be easier?) underestimated the peak pressure. Modeling the pad as a one-dimensional springset is better, but the pad is really a three-dimensional continuum. A theory of elasticity approach or a finite element modeling may be overkill, given uncertainties inherent in this problem, but it still represents better modeling.

Example 16–1

(*d*) To evaluate $\bar{u}$ we need to evaluate two integrations

$$\int_0^c p(u)u\,du = \int_0^{25} 0.001\,34(40+u)u\,du = 27.2\text{ N}$$

$$\int_0^c p(u)\,du = \int_0^{25} 0.001\,34(40+u)\,du = 1.76\text{ N}$$

Thus $\bar{u} = 27.2/1.76 = 15.5$ mm. Then, from Eq. (*f*) of Sec. 16–1, the critical coefficient of friction is

$$f_{\text{cr}} \geq \frac{c+\bar{u}}{a} = \frac{40+15.5}{100} = 0.56$$

The doorstop friction pad does not have a high enough coefficient of friction to make the doorstop a self-acting brake. The configuration must change and/or the pad material specification must be changed to sustain the function of a doorstop.

An Internal Expanding Centrifugal-acting Rim Clutch

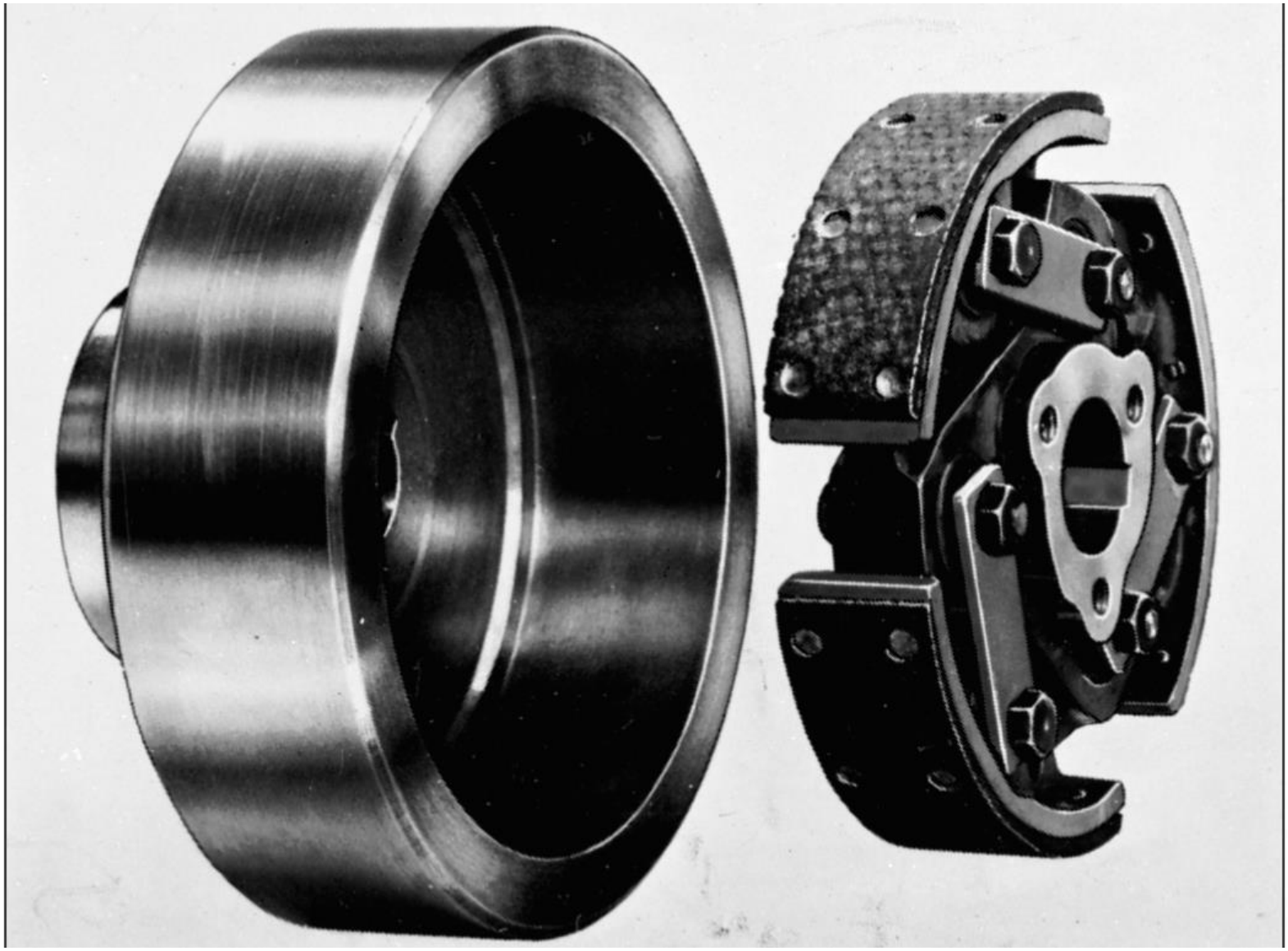

Fig. 16–3

Internal Friction Shoe Geometry

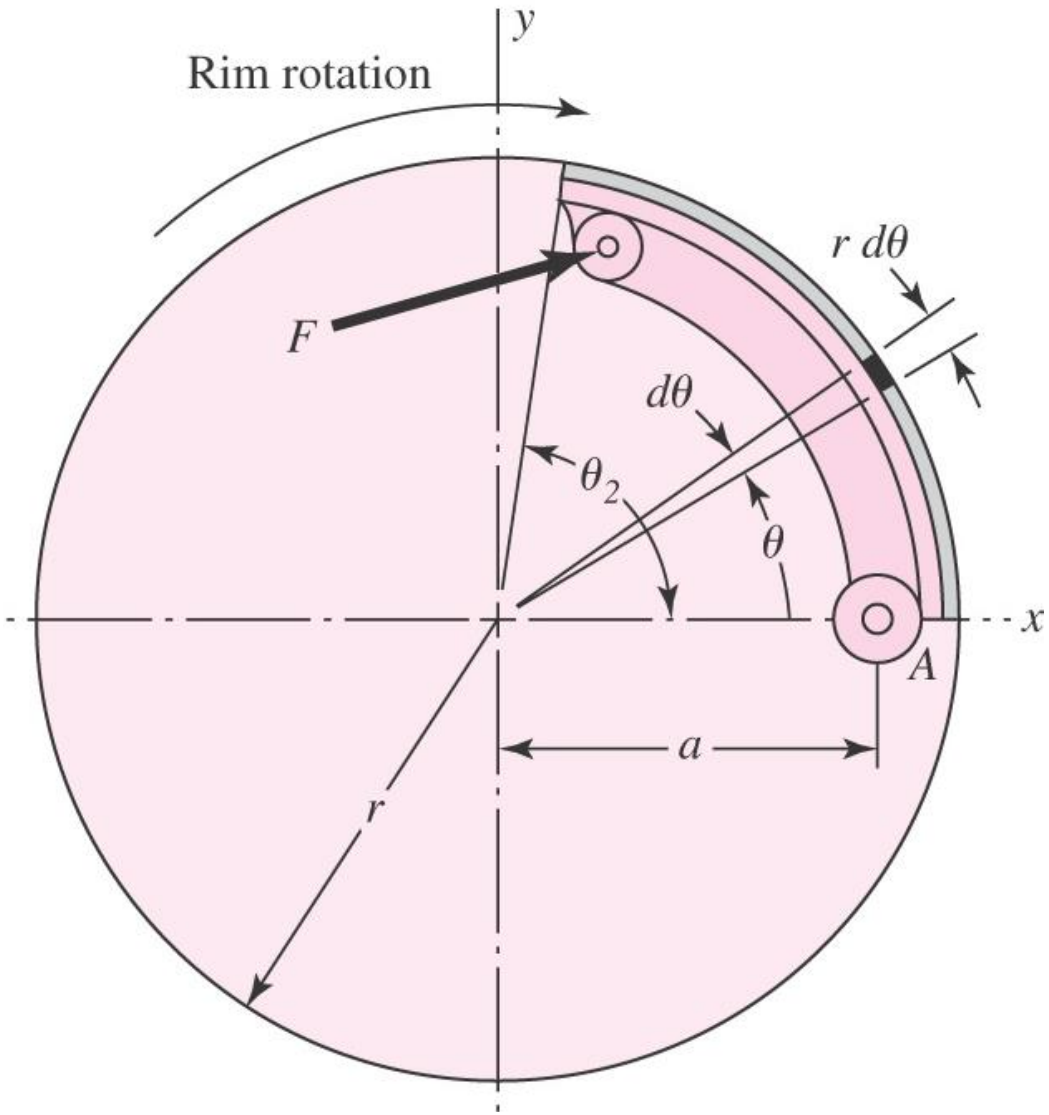

Fig. 16–4

Internal Friction Shoe Geometry

$$h\,\Delta\phi = 2\,r\,\Delta\phi\,\sin(\theta/2)$$

$$h\,\Delta\phi\cos(\theta/2) = 2\,r\,\Delta\phi\,\sin(\theta/2)\cos(\theta/2) = r\,\Delta\phi\,\sin\theta$$

$$\frac{p}{\sin\theta} = \frac{p_a}{\sin\theta_a} \qquad (a)$$

$$p = \frac{p_a}{\sin\theta_a}\sin\theta \qquad (16\text{–}1)$$

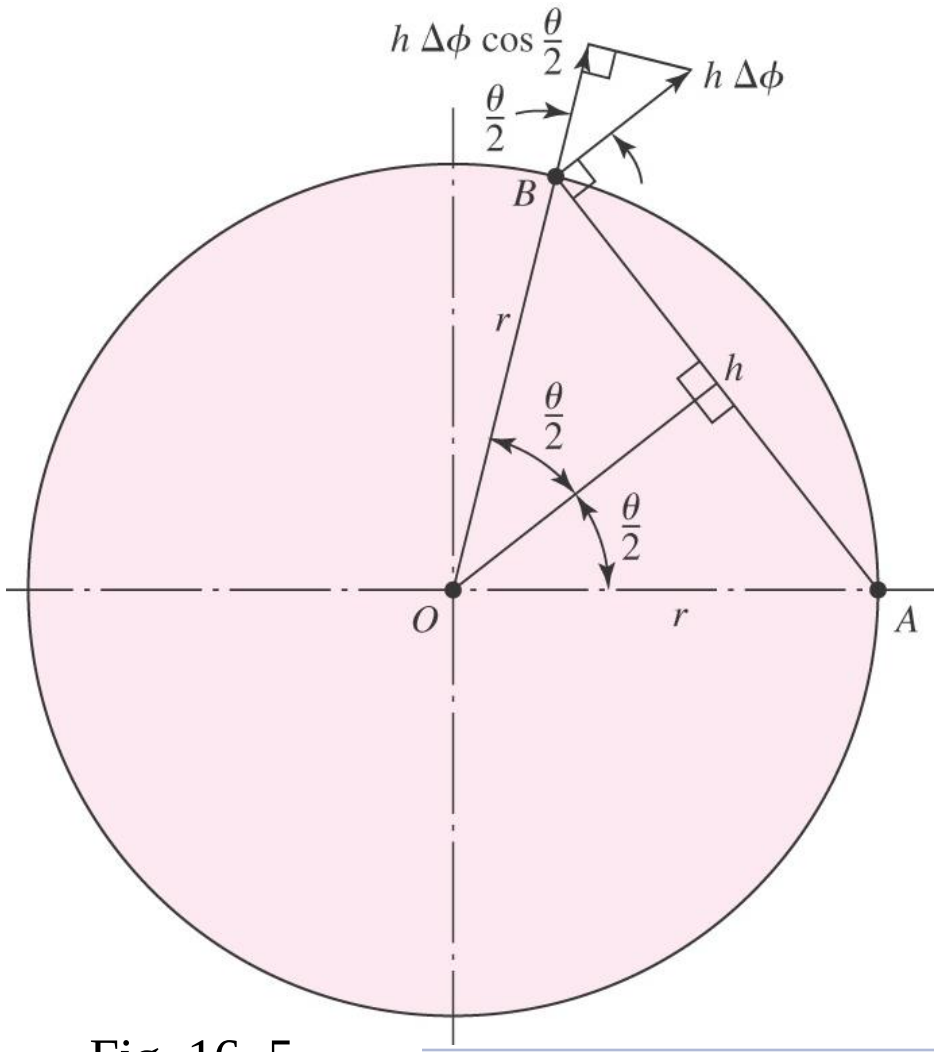

Fig. 16–5

Pressure Distribution Characteristics

- Pressure distribution is sinusoidal
- For short shoe, as in (*a*), the largest pressure on the shoe is p_a at the end of the shoe
- For long shoe, as in (*b*), the largest pressure is p_a at $\theta_a = 90^o$

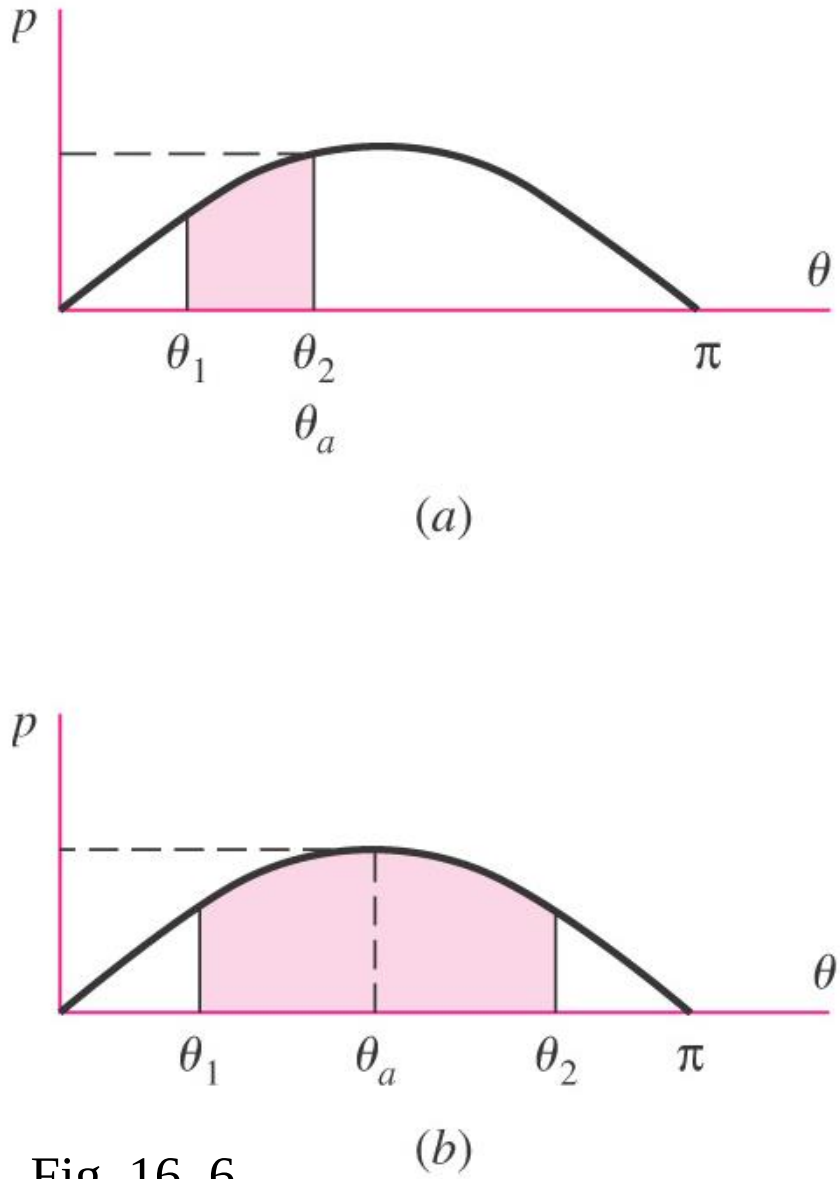

Fig. 16–6

Force Analysis

$$dN = pbr\,d\theta$$

$$dN = \frac{p_a br \sin\theta\,d\theta}{\sin\theta_a}$$

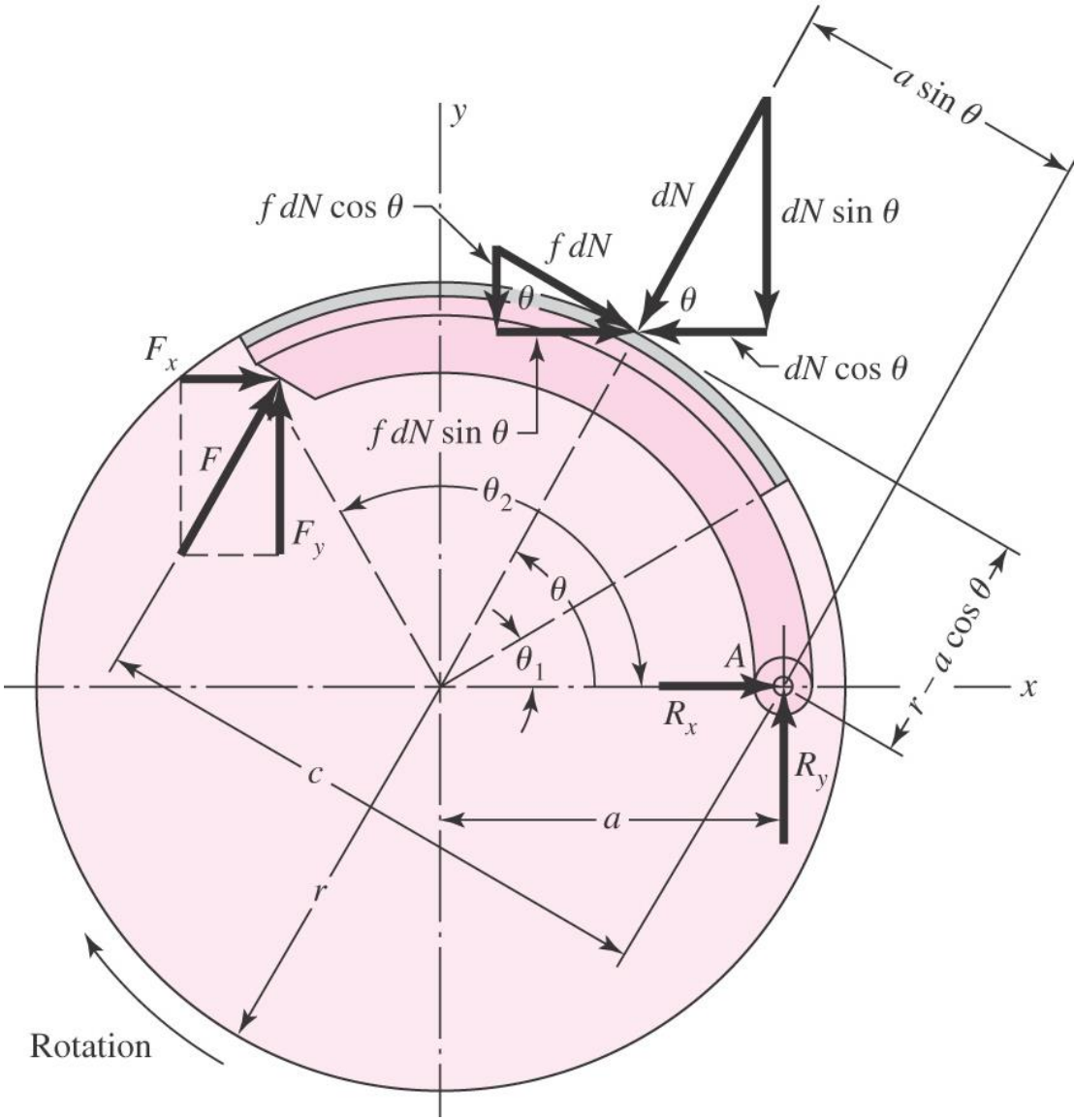

Fig. 16–7

Force Analysis

$$M_f = \int f\, dN(r - a\cos\theta) = \frac{f p_a b r}{\sin\theta_a}\int_{\theta_1}^{\theta_2} \sin\theta(r - a\cos\theta)\, d\theta \qquad (16\text{–}2)$$

$$M_N = \int dN(a\sin\theta) = \frac{p_a b r a}{\sin\theta_a}\int_{\theta_1}^{\theta_2} \sin^2\theta\, d\theta \qquad (16\text{–}3)$$

$$F = \frac{M_N - M_f}{c} \qquad (16\text{–}4)$$

Self-locking condition $\quad M_N > M_f \qquad (16\text{–}5)$

Force Analysis

$$T = \int f r \, dN = \frac{f p_a b r^2}{\sin\theta_a} \int_{\theta_1}^{\theta_2} \sin\theta \, d\theta$$

$$= \frac{f p_a b r^2 (\cos\theta_1 - \cos\theta_2)}{\sin\theta_a} \qquad (16\text{–}6)$$

$$R_x = \int dN \cos\theta - \int f \, dN \sin\theta - F_x$$

$$= \frac{p_a b r}{\sin\theta_a} \left(\int_{\theta_1}^{\theta_2} \sin\theta \cos\theta \, d\theta - f \int_{\theta_1}^{\theta_2} \sin^2\theta \, d\theta \right) - F_x \qquad (d)$$

$$R_y = \int dN \sin\theta + \int f \, dN \cos\theta - F_y$$

$$= \frac{p_a b r}{\sin\theta_a} \left(\int_{\theta_1}^{\theta_2} \sin^2\theta \, d\theta + f \int_{\theta_1}^{\theta_2} \sin\theta \cos\theta \, d\theta \right) - F_y \qquad (e)$$

Force Analysis

$$F = \frac{M_N + M_f}{c} \tag{16–7}$$

$$R_x = \frac{p_a b r}{\sin\theta_a}\left(\int_{\theta_1}^{\theta_2} \sin\theta\cos\theta\, d\theta + f\int_{\theta_1}^{\theta_2} \sin^2\theta\, d\theta\right) - F_x \tag{f}$$

$$R_y = \frac{p_a b r}{\sin\theta_a}\left(\int_{\theta_1}^{\theta_2} \sin^2\theta\, d\theta - f\int_{\theta_1}^{\theta_2} \sin\theta\cos\theta\, d\theta\right) - F_y \tag{g}$$

$$A = \int_{\theta_1}^{\theta_2} \sin\theta\cos\theta\, d\theta = \left(\frac{1}{2}\sin^2\theta\right)_{\theta_1}^{\theta_2}$$

$$B = \int_{\theta_1}^{\theta_2} \sin^2\theta\, d\theta = \left(\frac{\theta}{2} - \frac{1}{4}\sin 2\theta\right)_{\theta_1}^{\theta_2} \tag{16–8}$$

$$R_x = \frac{p_a b r}{\sin\theta_a}(A - fB) - F_x$$

$$R_y = \frac{p_a b r}{\sin\theta_a}(B + fA) - F_y \tag{16–9}$$

Example 16–2

The brake shown in Fig. 16–8 is 300 mm in diameter and is actuated by a mechanism that exerts the same force F on each shoe. The shoes are identical and have a face width of 32 mm. The lining is a molded asbestos having a coefficient of friction of 0.32 and a pressure limitation of 1000 kPa. Estimate the maximum

(*a*) Actuating force F.

(*b*) Braking capacity.

(*c*) Hinge-pin reactions.

Fig. 16–8

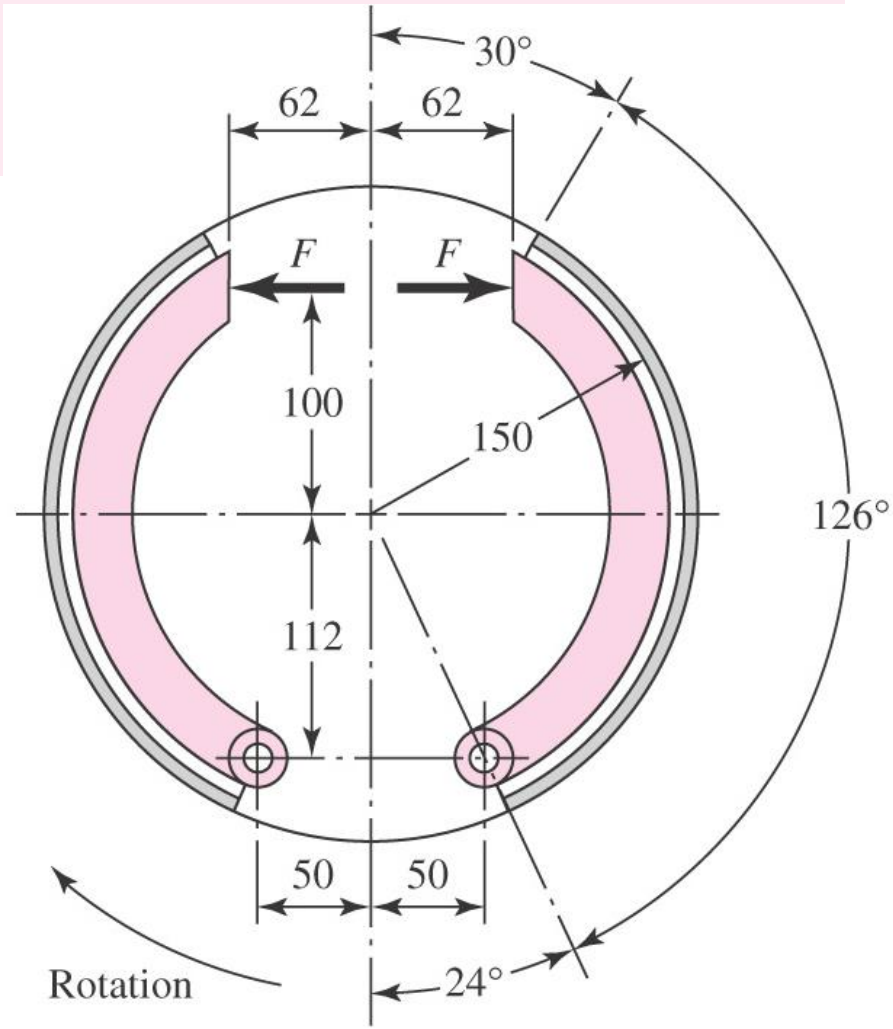

Example 16–2

(*a*) The right-hand shoe is self-energizing, and so the force F is found on the basis that the maximum pressure will occur on this shoe. Here $\theta_1 = 0°$, $\theta_2 = 126°$, $\theta_a = 90°$, and $\sin\theta_a = 1$. Also,

$$a = \sqrt{(112)^2 + (50)^2} = 122.7 \text{ mm}$$

Integrating Eq. (16–2) from 0 to θ_2 yields

$$M_f = \frac{f p_a b r}{\sin\theta_a}\left[\left(-r\cos\theta\right)_0^{\theta_2} - a\left(\frac{1}{2}\sin^2\theta\right)_0^{\theta_2}\right]$$

$$= \frac{f p_a b r}{\sin\theta_a}\left(r - r\cos\theta_2 - \frac{a}{2}\sin^2\theta_2\right)$$

Changing all lengths to meters, we have

$$M_f = (0.32)[1000(10)^3](0.032)(0.150)$$

$$\times\left[0.150 - 0.150\cos 126° - \left(\frac{0.1227}{2}\right)\sin^2 126°\right]$$

$$= 304 \text{ N}\cdot\text{m}$$

Example 16–2

The moment of the normal forces is obtained from Eq. (16–3). Integrating from 0 to θ_2 gives

$$M_N = \frac{p_a b r a}{\sin\theta_a}\left(\frac{\theta}{2} - \frac{1}{4}\sin 2\theta\right)\Bigg|_0^{\theta_2}$$

$$= \frac{p_a b r a}{\sin\theta_a}\left(\frac{\theta_2}{2} - \frac{1}{4}\sin 2\theta_2\right)$$

$$= [1000(10)^3](0.032)(0.150)(0.1227)\left\{\frac{\pi}{2}\frac{126}{180} - \frac{1}{4}\sin[(2)(126^\circ)]\right\}$$

$$= 788\ \mathrm{N}\cdot\mathrm{m}$$

From Eq. (16–4), the actuating force is

$$F = \frac{M_N - M_f}{c} = \frac{788 - 304}{100 + 112} = 2.28\ \mathrm{kN}$$

Answer

Example 16–2

(*b*) From Eq. (16–6), the torque applied by the right-hand shoe is

$$T_R = \frac{f p_a b r^2 (\cos\theta_1 - \cos\theta_2)}{\sin\theta_a}$$

$$= \frac{0.32[1000(10)^3](0.032)(0.150)^2(\cos 0^\circ - \cos 126^\circ)}{\sin 90^\circ} = 366 \text{ N} \cdot \text{m}$$

The torque contributed by the left-hand shoe cannot be obtained until we learn its maximum operating pressure. Equations (16–2) and (16–3) indicate that the frictional and normal moments are proportional to this pressure. Thus, for the left-hand shoe,

$$M_N = \frac{788 p_a}{1000} \qquad M_f = \frac{304 p_a}{1000}$$

Then, from Eq. (16–7),

$$F = \frac{M_N + M_f}{c}$$

or

$$2.28 = \frac{(788/1000)p_a + (304/1000)p_a}{100 + 112}$$

Example 16–2

Solving gives $p_a = 443$ kPa. Then, from Eq. (16–6), the torque on the left-hand shoe is

$$T_L = \frac{f p_a b r^2 (\cos\theta_1 - \cos\theta_2)}{\sin\theta_a}$$

Since $\sin\theta_a = \sin 90^\circ = 1$, we have

$$T_L = 0.32[443(10)^3](0.032)(0.150)^2(\cos 0^\circ - \cos 126^\circ) = 162 \text{ N} \cdot \text{m}$$

The braking capacity is the total torque:

$$T = T_R + T_L = 366 + 162 = 528 \text{ N} \cdot \text{m}$$

Answer

Example 16–2

(*c*) In order to find the hinge-pin reactions, we note that $\sin\theta_a = 1$ and $\theta_1 = 0$. Then Eq. (16–8) gives

$$A = \frac{1}{2}\sin^2\theta_2 = \frac{1}{2}\sin^2 126^\circ = 0.3273$$

$$B = \frac{\theta_2}{2} - \frac{1}{4}\sin 2\theta_2 = \frac{\pi(126)}{2(180)} - \frac{1}{4}\sin[(2)(126^\circ)] = 1.3373$$

Also, let

$$D = \frac{p_a b r}{\sin\theta_a} = \frac{1000(0.032)(0.150)}{1} = 4.8 \text{ kN}$$

where $p_a = 1000$ kPa for the right-hand shoe. Then, using Eq. (16–9), we have

$$R_x = D(A - fB) - F_x = 4.8[0.3273 - 0.32(1.3373)] - 2.28\sin 24^\circ$$
$$= -1.410 \text{ kN}$$

$$R_y = D(B + fA) - F_y = 4.8[1.3373 + 0.32(0.3273)] - 2.28\cos 24^\circ$$
$$= 4.839 \text{ kN}$$

Example 16–2

The resultant on this hinge pin is

$$R = \sqrt{(-1.410)^2 + (4.839)^2} = 5.04 \text{ kN}$$ Answer

The reactions at the hinge pin of the left-hand shoe are found using Eqs. (16–10) for a pressure of 443 kPa. They are found to be $R_x = 0.678$ kN and $R_y = 0.538$ kN. The resultant is

$$R = \sqrt{(0.678)^2 + (0.538)^2} = 0.866 \text{ kN}$$ Answer

The reactions for both hinge pins, together with their directions, are shown in Fig. 16–9.

Example 16–2

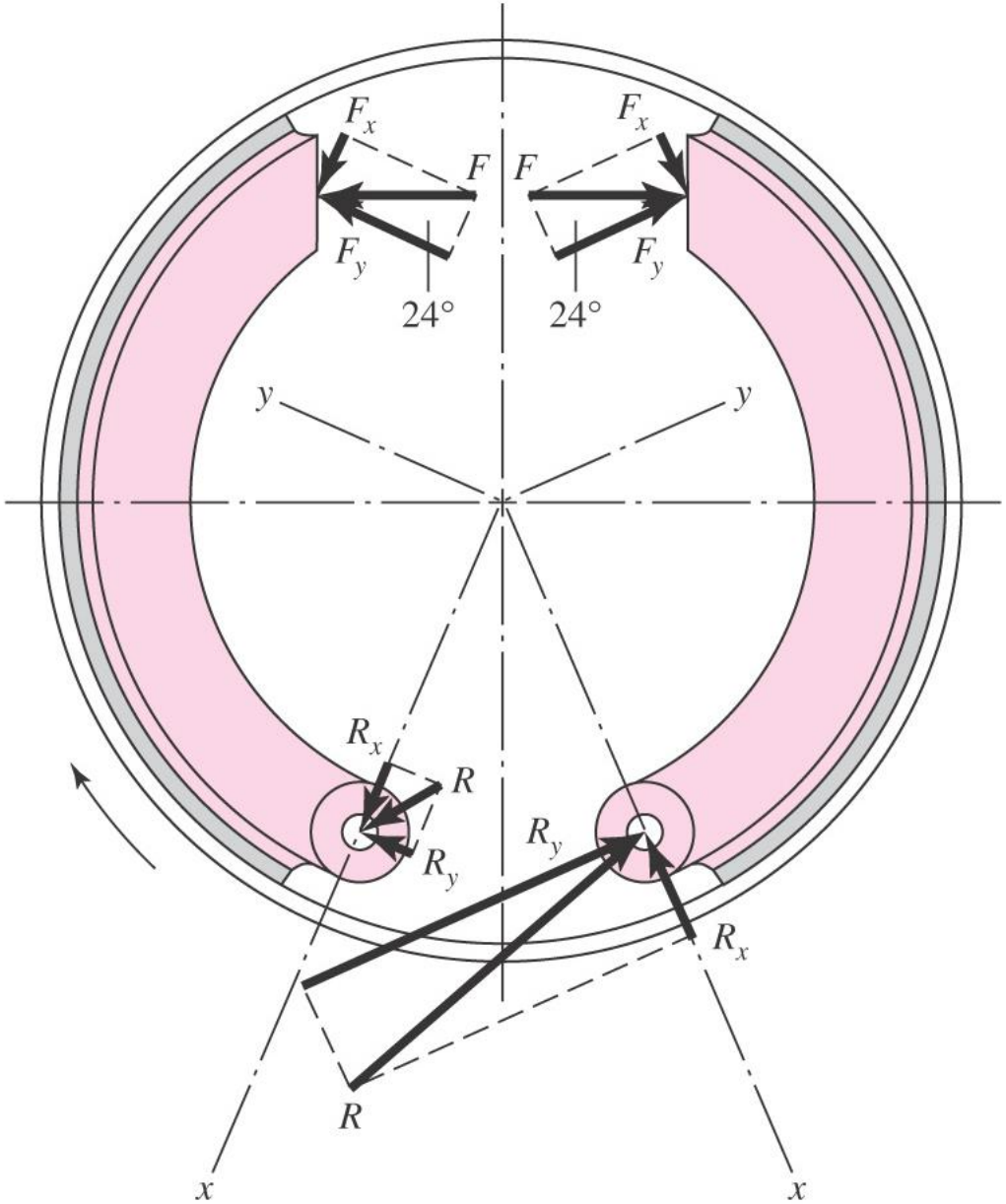

Fig. 16–9

An External Contracting Clutch-Brake

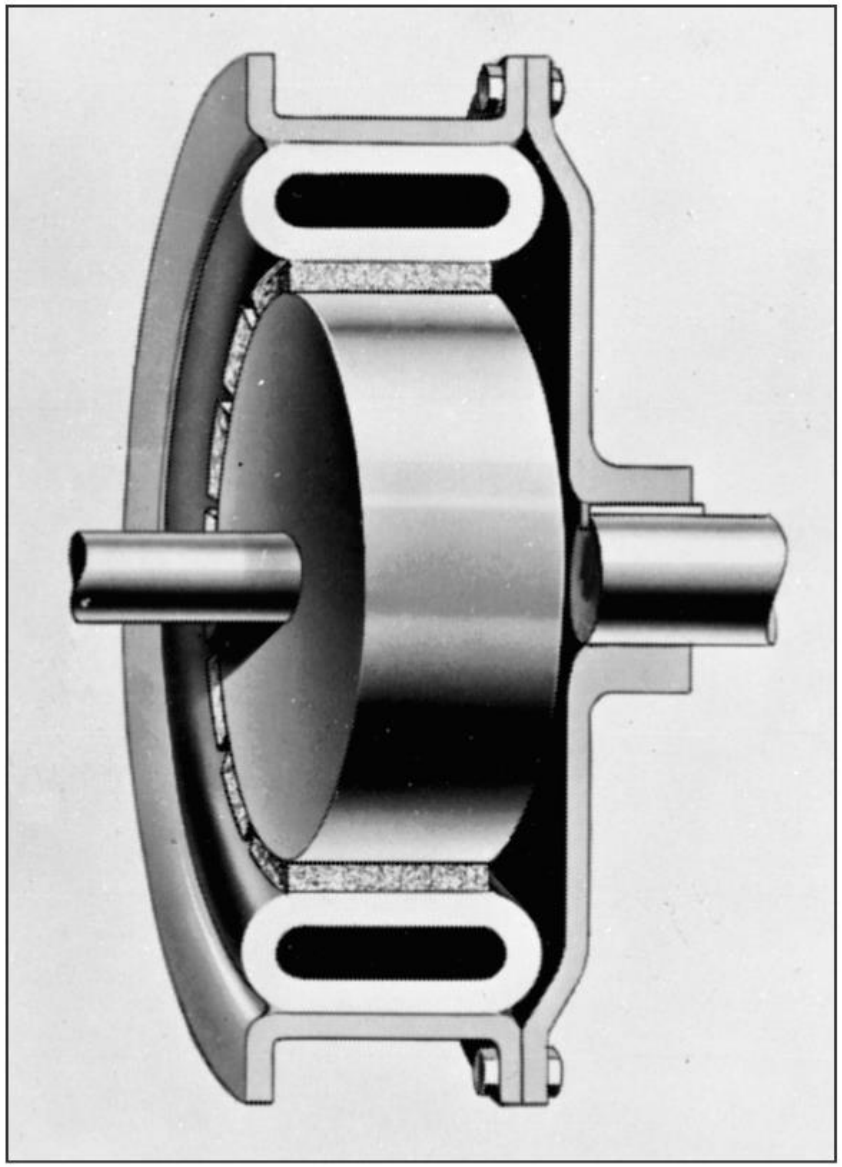

Fig. 16–10

Notation of External Contracting Shoes

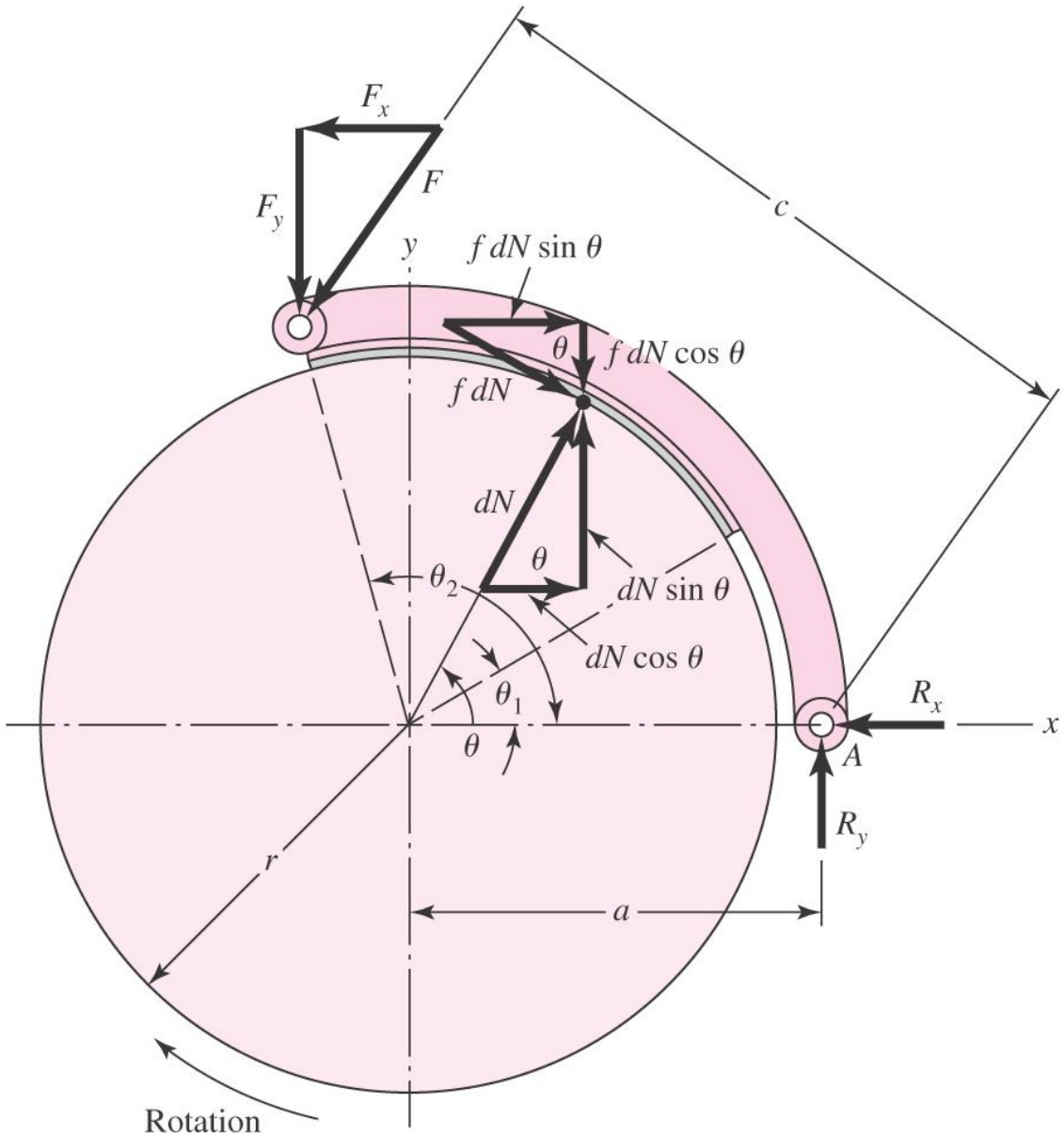

Fig. 16–11

Force Analysis for External Contracting Shoes

$$M_f = \frac{f p_a b r}{\sin\theta_a} \int_{\theta_1}^{\theta_2} \sin\theta (r - a\cos\theta)\, d\theta \qquad (16\text{–}2)$$

$$M_N = \frac{p_a b r a}{\sin\theta_a} \int_{\theta_1}^{\theta_2} \sin^2\theta\, d\theta \qquad (16\text{–}3)$$

$$F = \frac{M_N + M_f}{c} \qquad (16\text{–}11)$$

$$R_x = \int dN \cos\theta + \int f\, dN \sin\theta - F_x \qquad (a)$$

$$R_y = \int f\, dN \cos\theta - \int dN \sin\theta + F_y \qquad (b)$$

$$R_x = \frac{p_a b r}{\sin\theta_a}(A + fB) - F_x$$

$$R_y = \frac{p_a b r}{\sin\theta_a}(fA - B) + F_y \qquad (16\text{–}12)$$

Force Analysis for External Contracting Shoes

For counterclockwise rotation:

$$F = \frac{M_N - M_f}{c} \tag{16–13}$$

$$R_x = \frac{p_a b r}{\sin\theta_a}(A - fB) - F_x$$

$$R_y = \frac{p_a b r}{\sin\theta_a}(-fA - B) + F_y \tag{16–14}$$

Brake with Symmetrical Pivoted Shoe

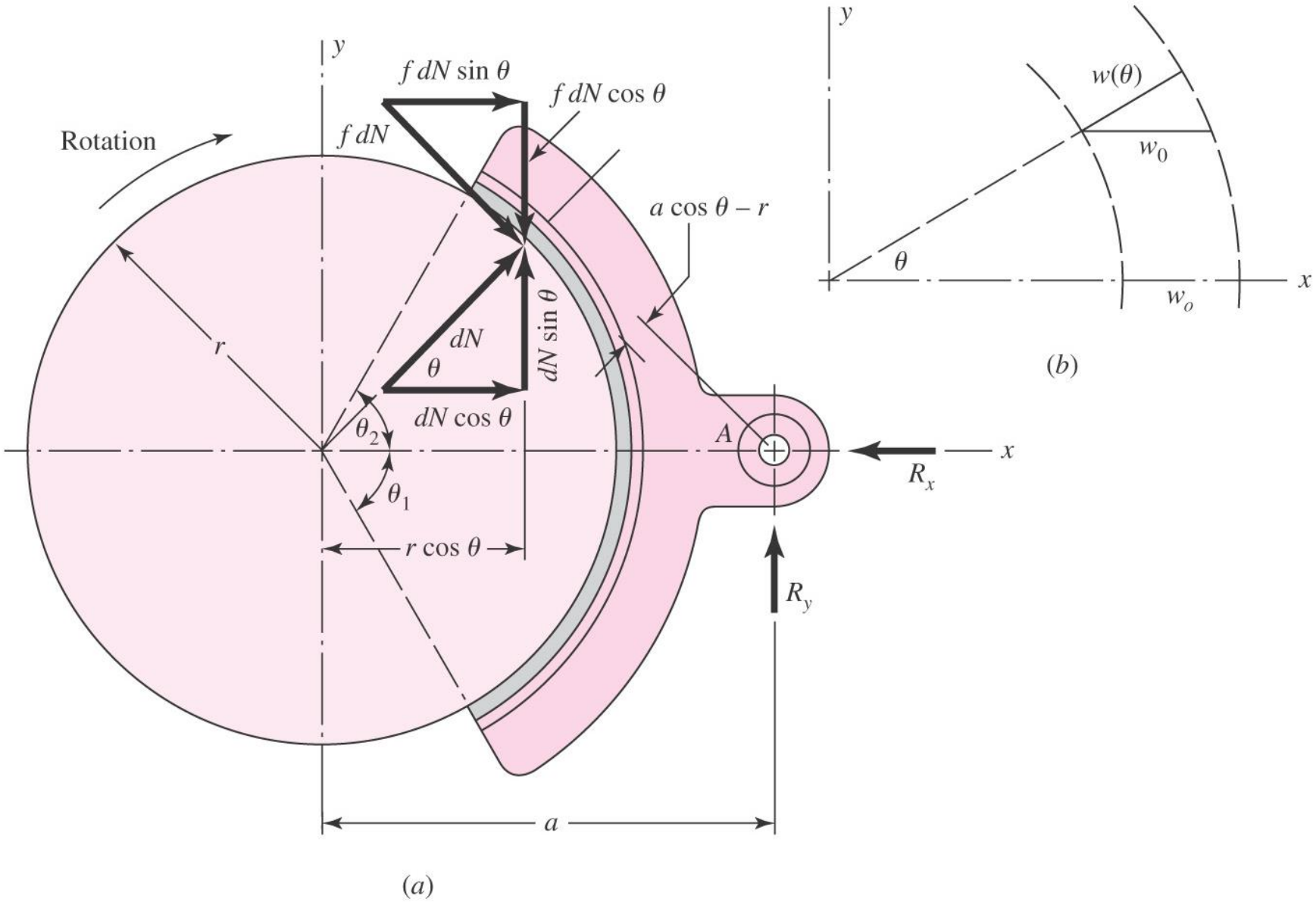

Fig. 16–12

Wear and Pressure with Symmetrical Pivoted Shoe

$$w(\theta) = w_0 \cos\theta$$

$$w(\theta) = KPVt$$

$$p(\theta) = \frac{w(\theta)}{KVt} = \frac{w_0 \cos\theta}{KVt}$$

$w_0/(KVt)$ is a constant

$$p(\theta) = (\text{constant})\cos\theta = p_a \cos\theta$$

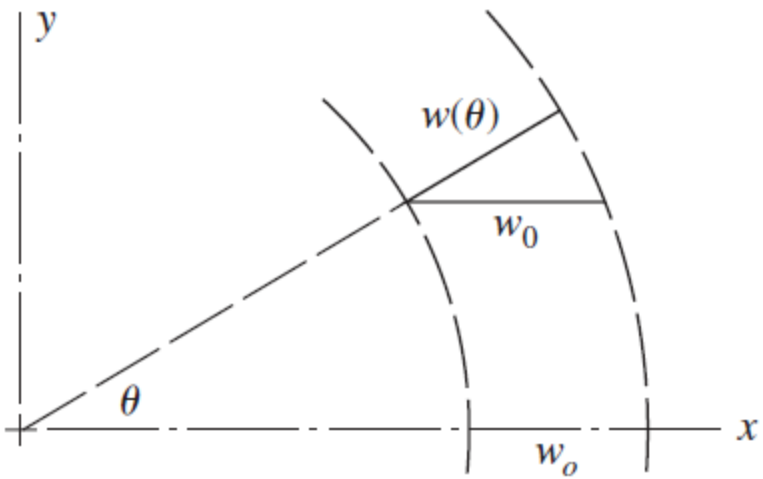

Fig. 16–12*b*

Force Analysis with Symmetrical Pivoted Shoe

$$dN = pbr\,d\theta \tag{d}$$

$$dN = p_a br\cos\theta\,d\theta \tag{e}$$

$$M_f = 2\int_0^{\theta_2}(f\,dN)(a\cos\theta - r) = 0$$

$$2fp_a br\int_0^{\theta_2}(a\cos^2\theta - r\cos\theta)\,d\theta = 0$$

$$a = \frac{4r\sin\theta_2}{2\theta_2 + \sin 2\theta_2} \tag{16–15}$$

Force Analysis with Symmetrical Pivoted Shoe

$$R_x = 2\int_0^{\theta_2} dN\cos\theta = 2\int_0^{\theta_2}(p_a br\cos\theta\, d\theta)\cos\theta = \frac{p_a br}{2}(2\theta_2 + \sin 2\theta_2) \quad (16\text{–}16)$$

$$\int f\, dN \sin\theta = 0$$

$$R_y = 2\int_0^{\theta_2} f\, dN\cos\theta = 2\int_0^{\theta_2} f(p_a br\cos\theta\, d\theta)\cos\theta = \frac{p_a brf}{2}(2\theta_2 + \sin 2\theta_2) \quad (16\text{–}17)$$

$$\int dN \sin\theta = 0$$

$$T = afN \quad (16\text{–}18)$$

Notation for Band-Type Clutches and Brakes

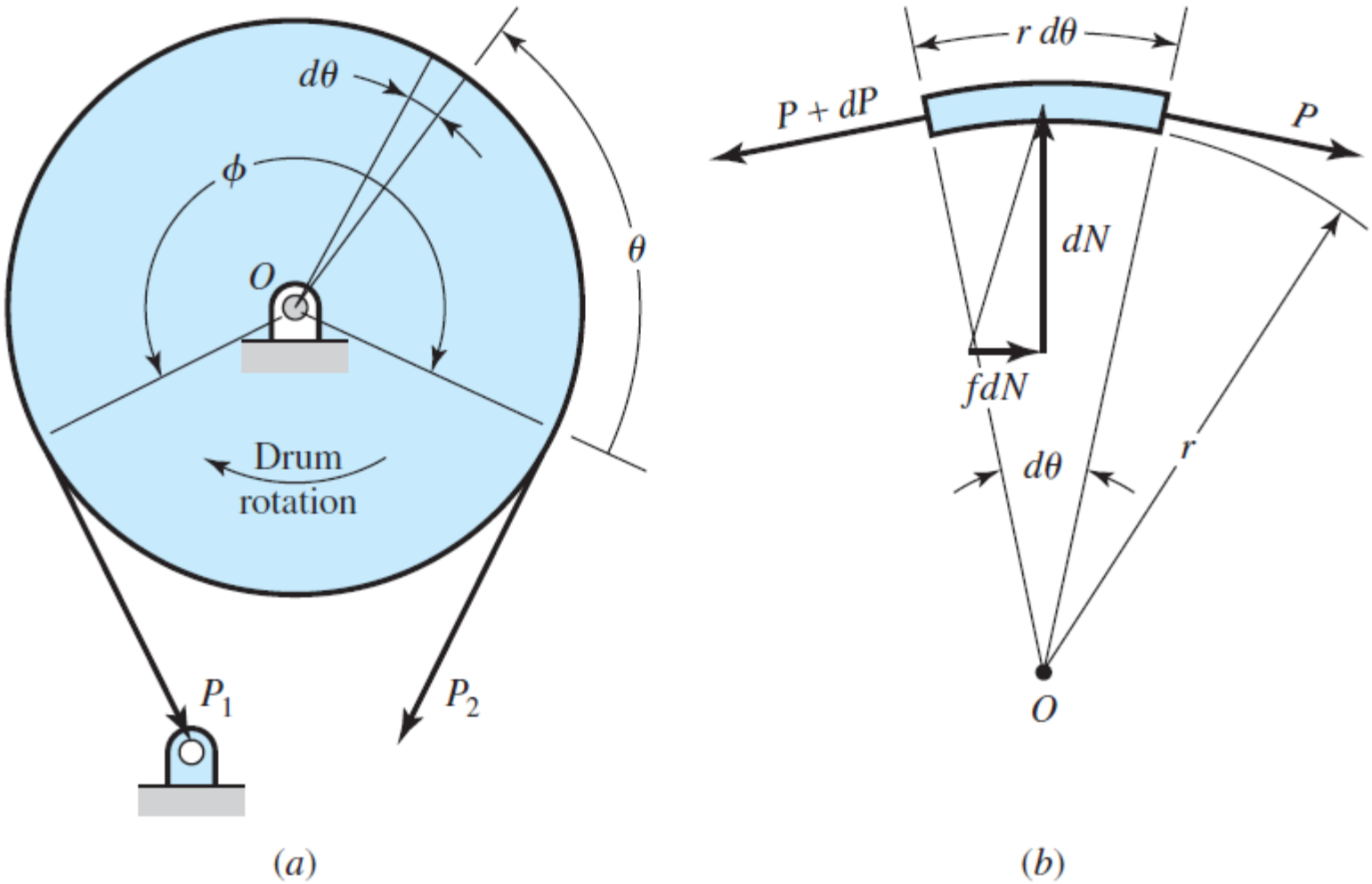

Fig. 16–13

Force Analysis for Brake Band

$$(P + dP)\sin\frac{d\theta}{2} + P\sin\frac{d\theta}{2} - dN = 0 \qquad (a)$$

$$dN = P\,d\theta \qquad (b)$$

$$(P + dP)\cos\frac{d\theta}{2} - P\cos\frac{d\theta}{2} - f\,dN = 0 \qquad (c)$$

$$dP - f\,dN = 0 \qquad (d)$$

$$\int_{P_2}^{P_1}\frac{dP}{P} = f\int_0^{\phi} d\theta \qquad \text{or} \qquad \ln\frac{P_1}{P_2} = f\phi$$

$$\frac{P_1}{P_2} = e^{f\phi} \qquad (16\text{–}19)$$

Force Analysis for Brake Band

$$T = (P_1 - P_2)\frac{D}{2} \tag{16–20}$$

$$dN = pbr\,d\theta \tag{e}$$

$$P\,d\theta = pbr\,d\theta$$

$$p = \frac{P}{br} = \frac{2P}{bD} \tag{16–21}$$

$$p_a = \frac{2P_1}{bD} \tag{16–22}$$

Frictional-Contact Axial Single-Plate Clutch

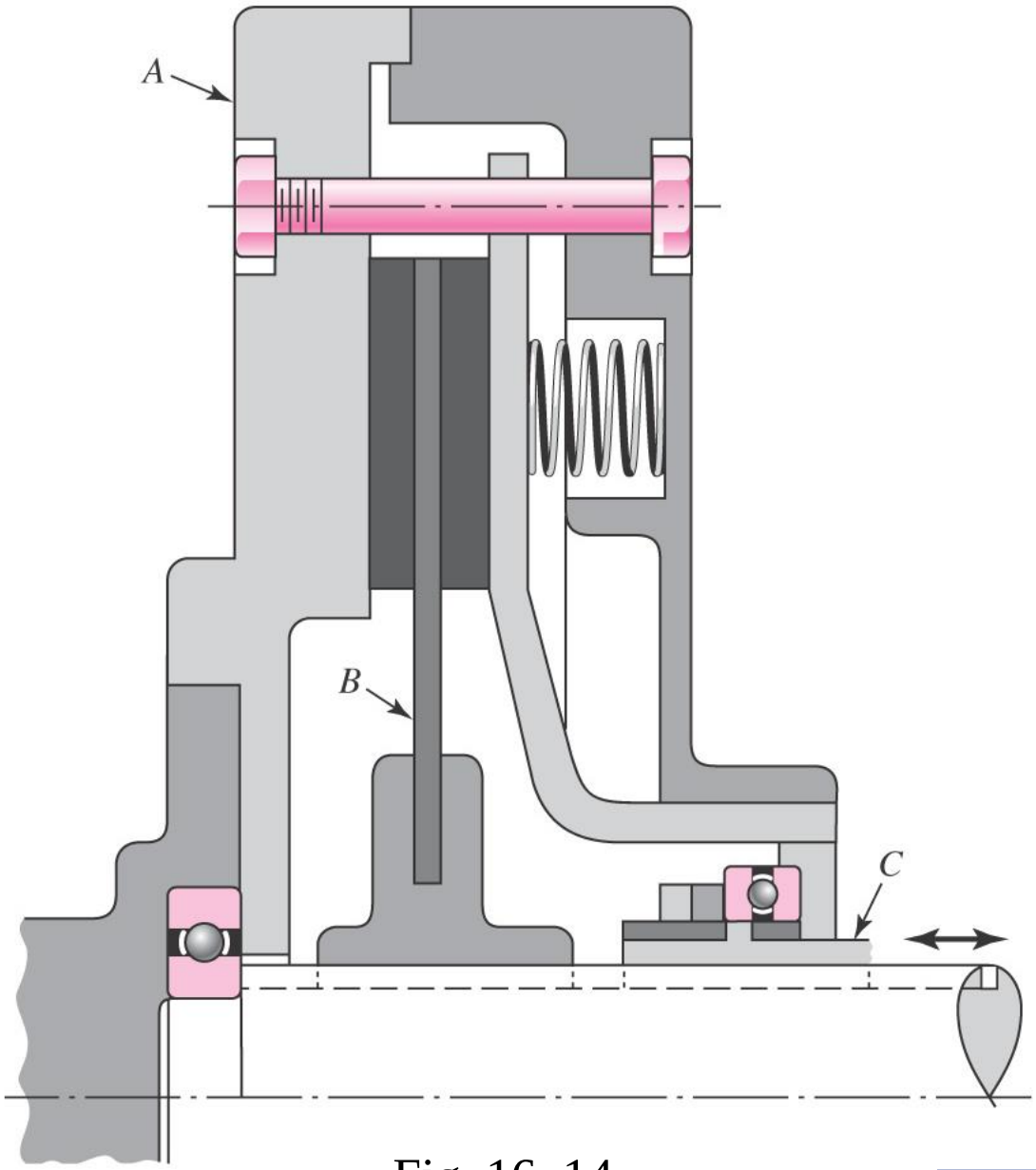

Fig. 16–14

Frictional-Contact Axial Multi-Plate Clutch

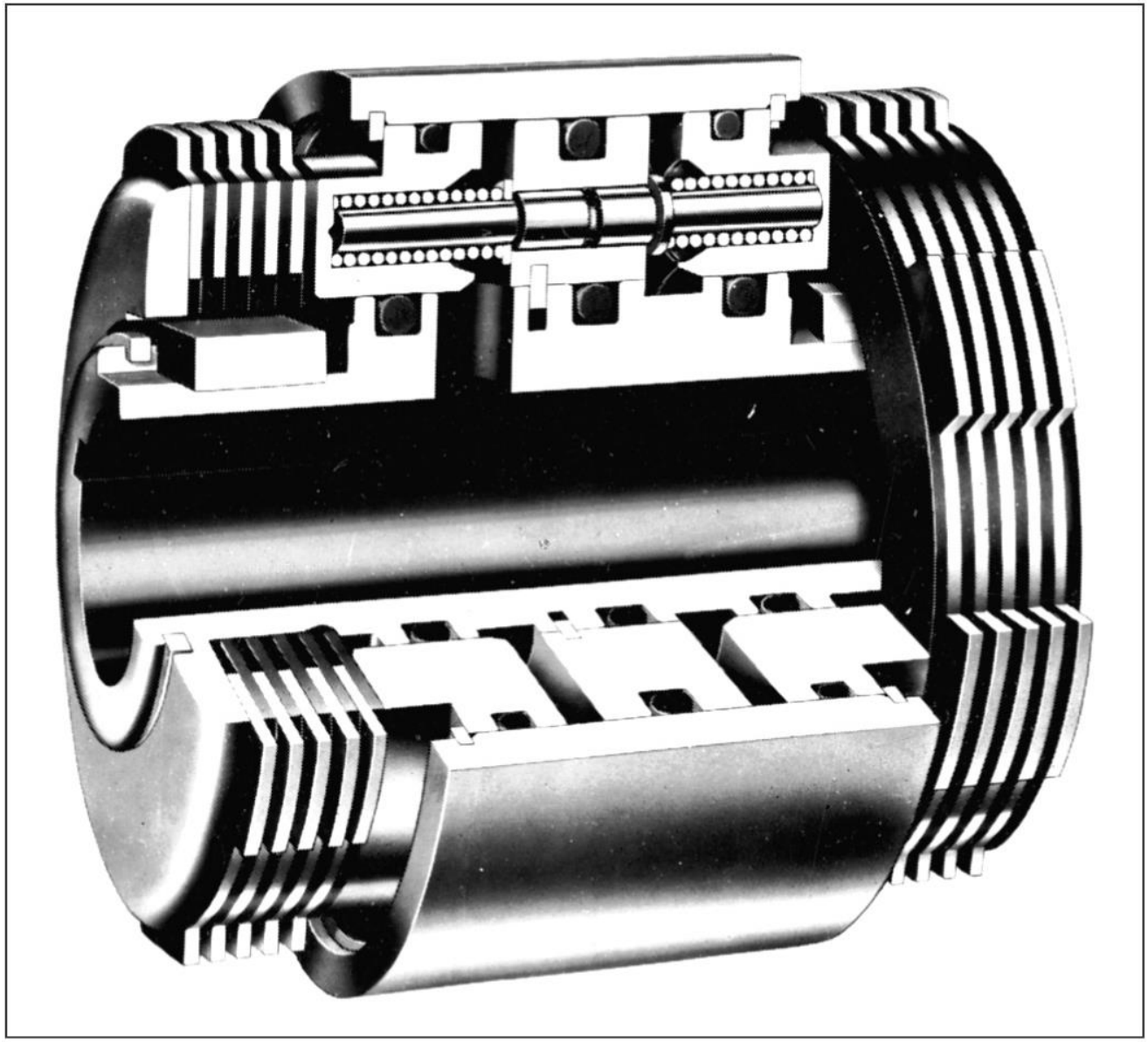

Fig. 16–15

Geometry of Disk Friction Member

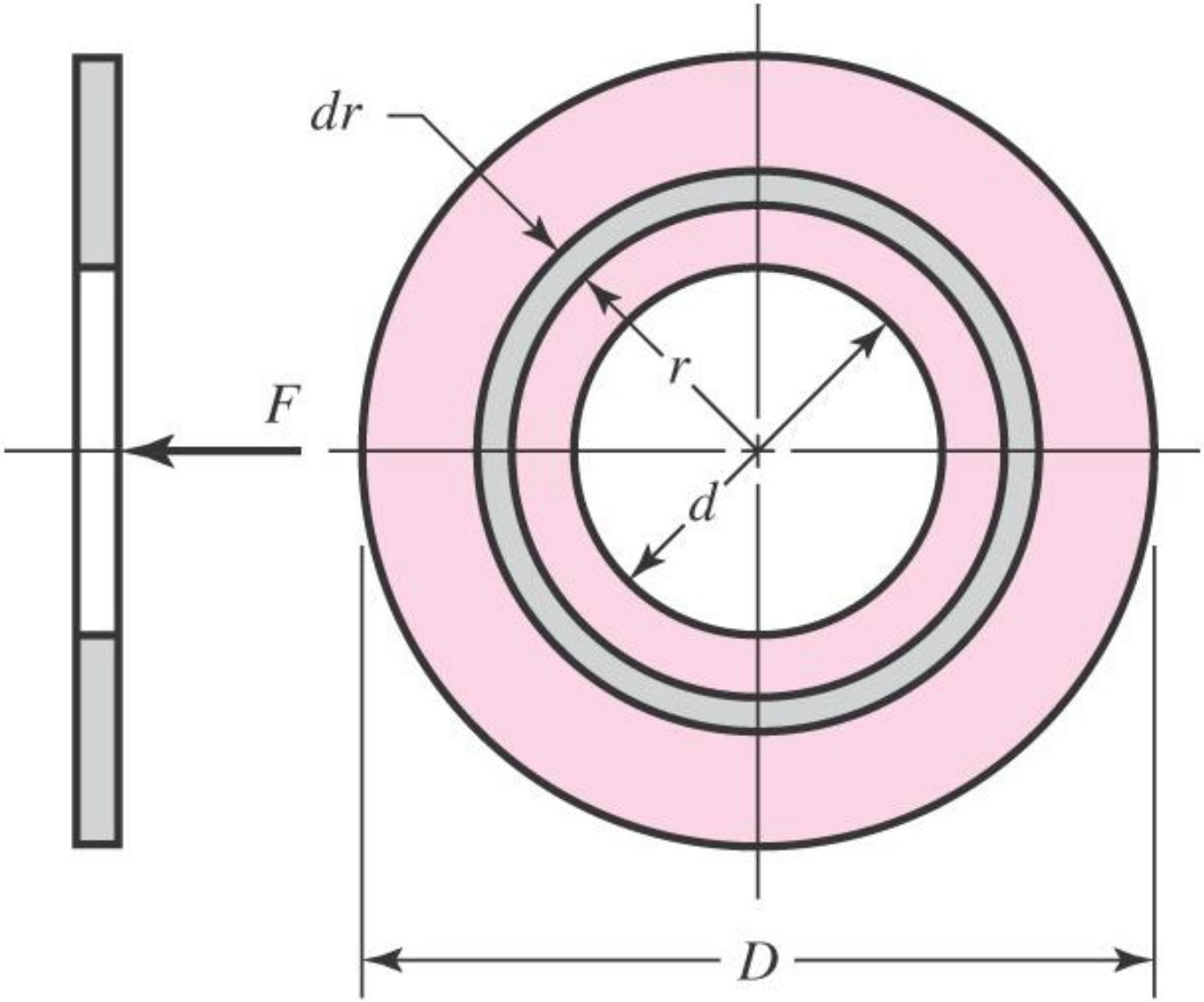

Fig. 16–16

Uniform Wear

$$w = f_1 f_2 K P V t$$

For uniform wear, w is constant, so PV is constant. Setting $p = P$, and $V = r\omega$, the maximum pressure p_a occurs where r is minimum, $r = d/2$,

$$pr = p_a \frac{d}{2} \qquad (a)$$

Uniform Wear

Find the total normal force by letting r vary from $d/2$ to $D/2$, and integrating,

$$F = \int_{d/2}^{D/2} 2\pi p r \, dr = \pi p_a d \int_{d/2}^{D/2} dr = \frac{\pi p_a d}{2}(D - d) \qquad (16\text{–}23)$$

$$T = \int_{d/2}^{D/2} 2\pi f p r^2 \, dr = \pi f p_a d \int_{d/2}^{D/2} r \, dr = \frac{\pi f p_a d}{8}(D^2 - d^2) \qquad (16\text{–}24)$$

$$T = \frac{F f}{4}(D + d) \qquad (16\text{–}25)$$

Uniform Pressure

$$F = \frac{\pi p_a}{4}(D^2 - d^2) \tag{16–26}$$

$$T = 2\pi f p_a \int_{d/2}^{D/2} r^2\, dr = \frac{\pi f p_a}{12}(D^3 - d^3) \tag{16–27}$$

$$T = \frac{Ff}{3}\frac{D^3 - d^3}{D^2 - d^2} \tag{16–28}$$

Comparison of Uniform Wear with Uniform Pressure

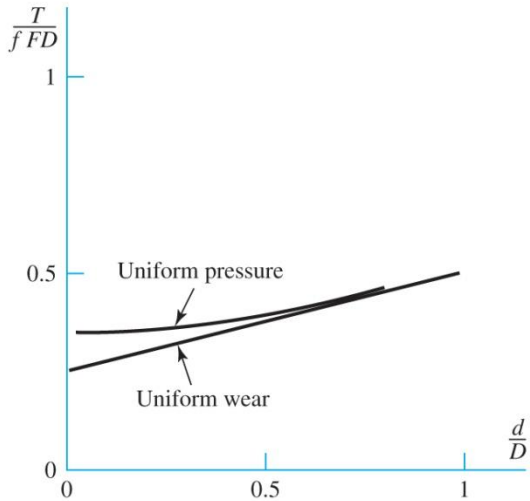

$$\frac{T}{fFD} = \frac{1}{3}\,\frac{1-(d/D)^3}{1-(d/D)^2}$$

$$\frac{T}{fFD} = \frac{1+d/D}{4}$$

Fig. 16–17

Automotive Disk Brake

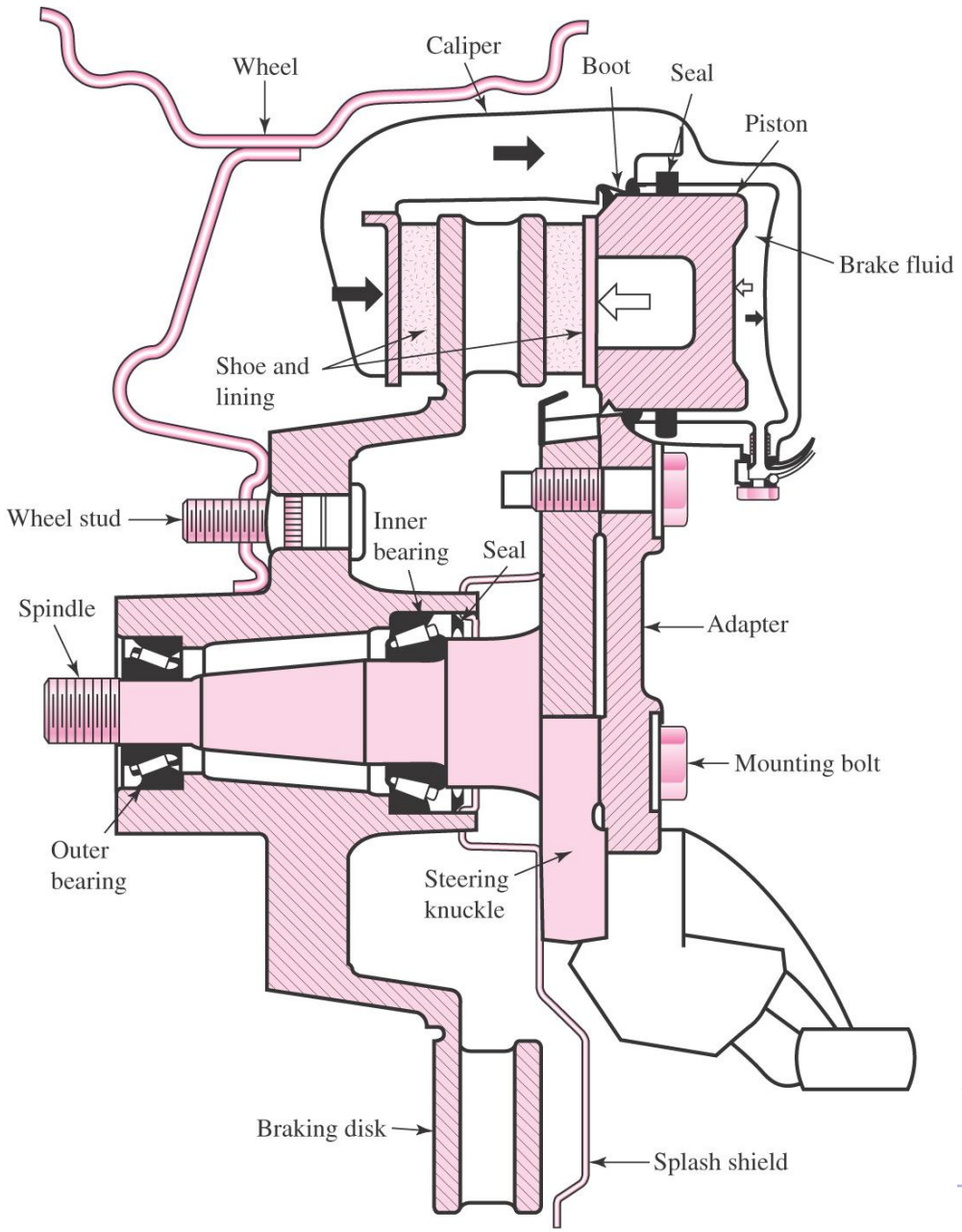

Fig. 16–18

Geometry of Contact Area of Annular-Pad Brake

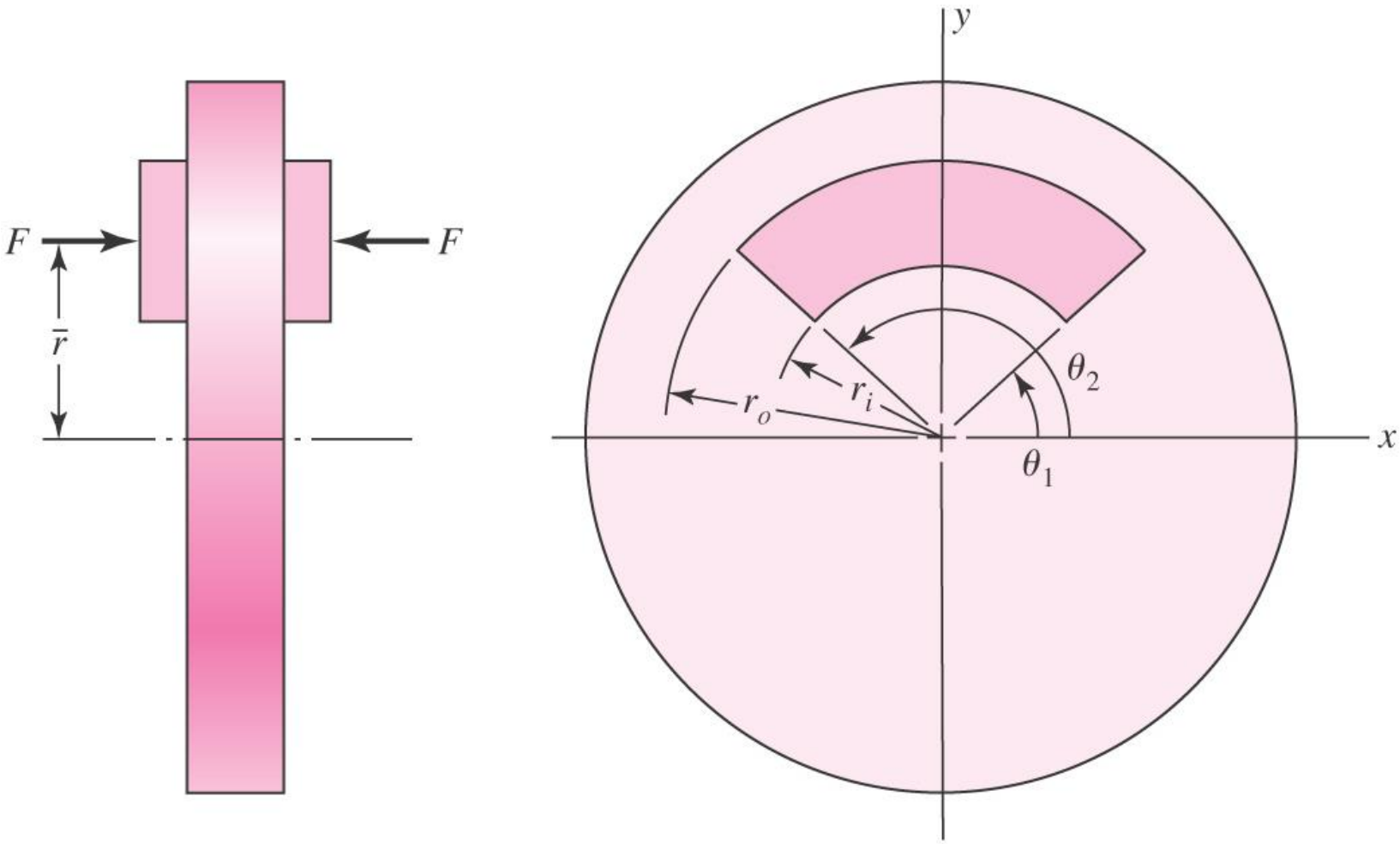

Fig. 16–19

Analysis of Annular-Pad Brake

$$F = \int_{\theta_1}^{\theta_2} \int_{r_i}^{r_o} pr\,dr\,d\theta = (\theta_2 - \theta_1) \int_{r_i}^{r_o} pr\,dr \qquad (16\text{–}29)$$

$$T = \int_{\theta_1}^{\theta_2} \int_{r_i}^{r_o} fpr^2\,dr\,d\theta = (\theta_2 - \theta_1) f \int_{r_i}^{r_o} pr^2\,dr \qquad (16\text{–}30)$$

$$r_e = \frac{T}{fF} = \frac{\int_{r_i}^{r_o} pr^2\,dr}{\int_{r_i}^{r_o} pr\,dr} \qquad (16\text{–}31)$$

$$M_x = F\bar{r} = \int_{\theta_1}^{\theta_2} \int_{r_i}^{r_o} pr(r\sin\theta)\,dr\,d\theta = (\cos\theta_1 - \cos\theta_2) \int_{r_i}^{r_o} pr^2\,dr$$

$$\bar{r} = \frac{M_x}{F} = \frac{(\cos\theta_1 - \cos\theta_2)}{\theta_2 - \theta_1} r_e \qquad (16\text{–}32)$$

Uniform Wear (pressure distribution: $pr=p_a r_i$)

$$F = (\theta_2 - \theta_1) p_a r_i (r_o - r_i) \tag{16–33}$$

$$T = (\theta_2 - \theta_1) f p_a r_i \int_{r_i}^{r_o} r\,dr = \frac{1}{2}(\theta_2 - \theta_1) f p_a r_i \left(r_o^2 - r_i^2\right) \tag{16–34}$$

$$r_e = \frac{p_a r_i \int_{r_i}^{r_o} r\,dr}{p_a r_i \int_{r_i}^{r_o} dr} = \frac{r_o^2 - r_i^2}{2} \frac{1}{r_o - r_i} = \frac{r_o + r_i}{2} \tag{16–35}$$

$$\bar{r} = \frac{\cos\theta_1 - \cos\theta_2}{\theta_2 - \theta_1} \frac{r_o + r_i}{2} \tag{16–36}$$

Uniform Pressure (pressure distribution: $p=p_a$)

$$F = (\theta_2 - \theta_1) p_a \int_{r_i}^{r_o} r\,dr = \frac{1}{2}(\theta_2 - \theta_1) p_a \left(r_o^2 - r_i^2\right) \tag{16–37}$$

$$T = (\theta_2 - \theta_1) f p_a \int_{r_i}^{r_o} r^2\,dr = \frac{1}{3}(\theta_2 - \theta_1) f p_a \left(r_o^3 - r_i^3\right) \tag{16–38}$$

$$r_e = \frac{p_a \int_{r_i}^{r_o} r^2\,dr}{p_a \int_{r_i}^{r_o} r\,dr} = \frac{r_o^3 - r_i^3}{3} \frac{2}{r_o^2 - r_i^2} = \frac{2}{3} \frac{r_o^3 - r_i^3}{r_o^2 - r_i^2} \tag{16–39}$$

$$\bar{r} = \frac{\cos\theta_1 - \cos\theta_2}{\theta_2 - \theta_1} \frac{2}{3} \frac{r_o^3 - r_i^3}{r_o^2 - r_i^2} = \frac{2}{3} \frac{r_o^3 - r_i^3}{r_o^2 - r_i^2} \frac{\cos\theta_1 - \cos\theta_2}{\theta_2 - \theta_1} \tag{16–40}$$

Example 16–3

Two annular pads, $r_i = 90$ mm, $r_o = 130$ mm, subtend an angle of 108°, have a coefficient of friction of 0.42, and are actuated by a pair of hydraulic cylinders 38 mm in diameter. The torque requirement is 1300 N · m. For uniform wear

(*a*) Find the largest normal pressure p_a.

(*b*) Estimate the actuating force F.

(*c*) Find the equivalent radius r_e and force location $\bar{r}$.

(*d*) Estimate the required hydraulic pressure.

Solution

(*a*) From Eq. (16–34), with $T = 1300/2 = 650$ N · m for each pad,

$$p_a = \frac{2T}{(\theta_2 - \theta_1) f r_i \left(r_o^2 - r_i^2\right.}$$

$$= \frac{2(650\,000)}{(144^\circ - 36^\circ)(\pi/180)0.42(90)(130^2 - 90^2)} = 2.07 \text{ MPa}$$

Answer

Example 16–3

(*b*) From Eq. (16–33),

$$F = (\theta_2 - \theta_1)p_a r_i(r_o - r_i) = (144^\circ - 36^\circ)(\pi/180)2.07(90)(130 - 40)$$
$$= 14069.26 \text{ N}$$

(*c*) From Eq. (16–35),

$$r_e = \frac{r_o + r_i}{2} = \frac{130 - 90}{2} = 110.00 \text{ mm}$$

From Eq. (16–36),

$$\bar{r} = \frac{\cos\theta_1 - \cos\theta_2}{\theta_2 - \theta_1}\,\frac{r_o + r_i}{2} = \frac{\cos 36^\circ - \cos 144^\circ}{(144^\circ - 36^\circ)(\pi/180)}\,\frac{130 + 90}{2}$$
$$= 94.42 \text{ mm}$$

Example 16–3

(*d*) Each cylinder supplies the actuating force, 16 681 N.

$$p_{\text{hydraulic}} = \frac{F}{A_P} = \frac{14069.26}{\pi(38^2/4)} = 12.41 \text{ MPa}$$

Answer

Geometry of Circular Pad Caliper Brake

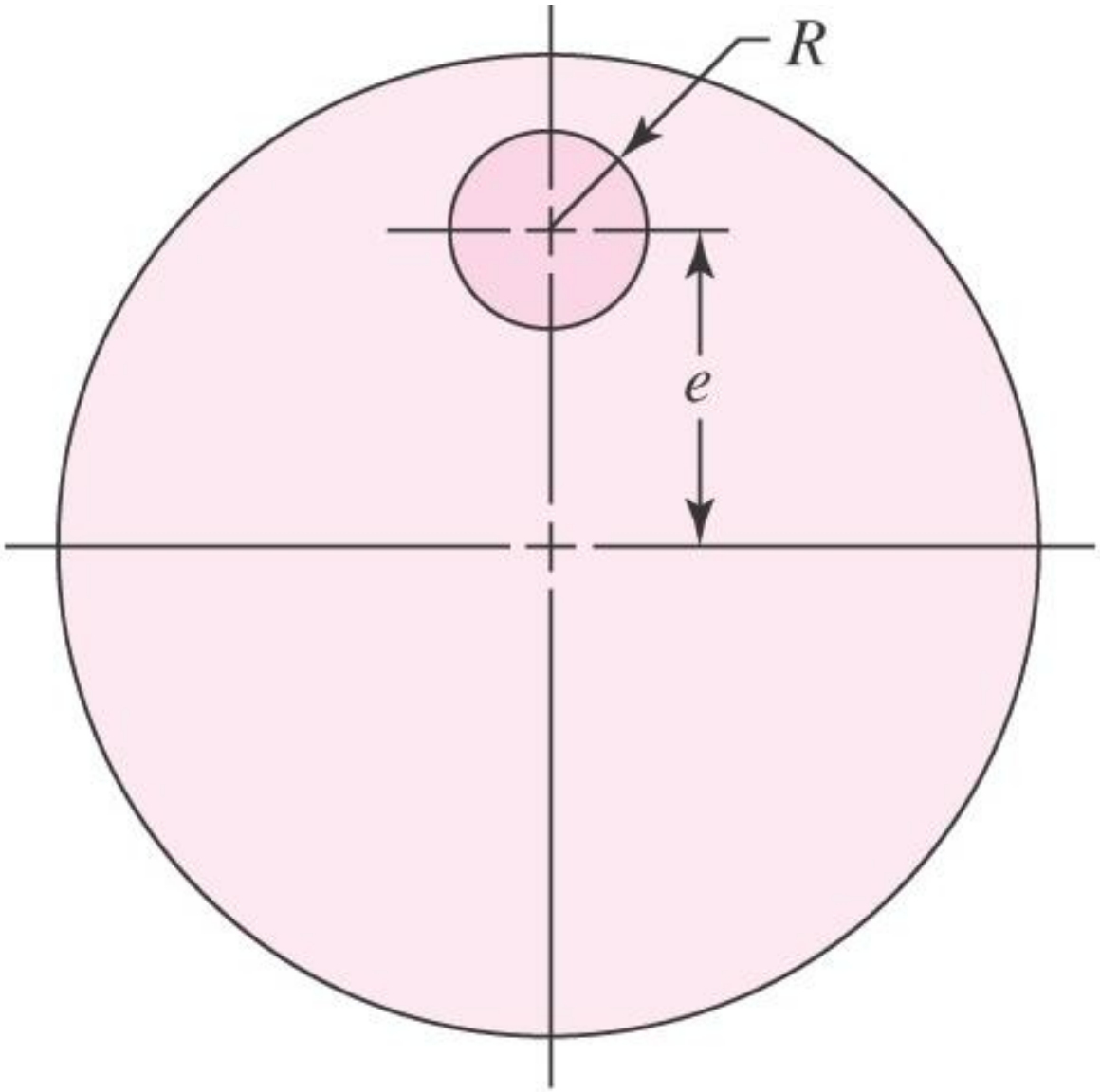

Fig. 16–20

Analysis of Circular Pad Caliper Brake

$$r_e = \delta e \tag{16–41}$$

$$F = \pi R^2 p_{av} \tag{16–42}$$

$$T = f F r_e \tag{16–43}$$

Table 16–1

Parameters for a Circular-Pad Caliper Brake

Source: G. A. Fazekas, "On Circular Spot Brakes," *Trans. ASME, J. Engineering for Industry,* vol. 94, Series B, No. 3, August 1972, pp. 859–863.

$\frac{R}{e}$	$\delta = \frac{r_e}{e}$	$\frac{p_{max}}{p_{av}}$
0.0	1.000	1.000
0.1	0.983	1.093
0.2	0.969	1.212
0.3	0.957	1.367
0.4	0.947	1.578
0.5	0.938	1.875

Example 16–4

A button-pad disk brake uses dry sintered metal pads. The pad radius is 10 mm, and its center is 50 mm from the axis of rotation of the 88-mm-diameter disk. Using half of the largest allowable pressure, $p_{\max} = 2.8$ MPa, find the actuating force and the brake torque. The coefficient of friction is 0.37.

Solution

Since the pad radius $R = 10$ mm and eccentricity $e = 50$ mm,

$$\frac{R}{e} = \frac{10}{50} = 0.20$$

From Table 16–1, by interpolation, $\delta = 0.969$ and $p_{\max}/p_{\text{av}} = 1.212$. It follows that the effective radius e is found from Eq. (16–41):

$$r_e = \delta e = 0.969(50) = 48.45 \text{ mm}$$

and the average pressure is

$$p_{\text{av}} = \frac{p_{\max}/2}{1.290} = \frac{2.8/2}{1.290} = 1.16 \text{ MPa}$$

Example 16–4

The actuating force F is found from Eq. (16–42) to be

Answer $$F = \pi R^2 p_{\text{av}} = \pi(10)^2 1.16 = 362.89 \text{ N} \qquad \text{(one side)}$$

The brake torque T is

Answer $$T = f F r_e = 0.37\,(362.89)\,48.45 = 6505.35 \text{ N} \cdot \text{mm} \qquad \text{(one side)}$$

Cone Clutch

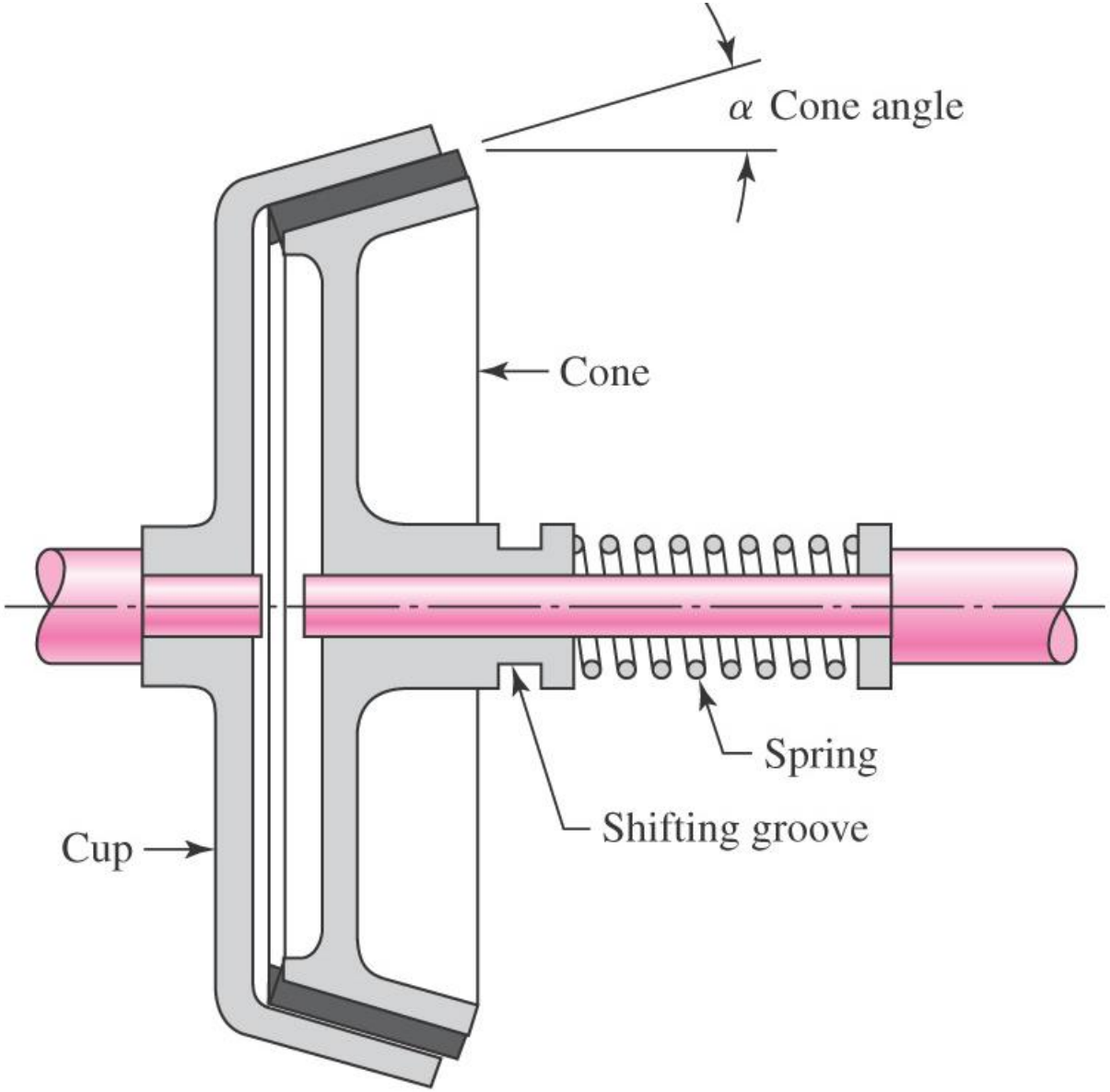

Fig. 16–21

Contact Area of Cone Clutch

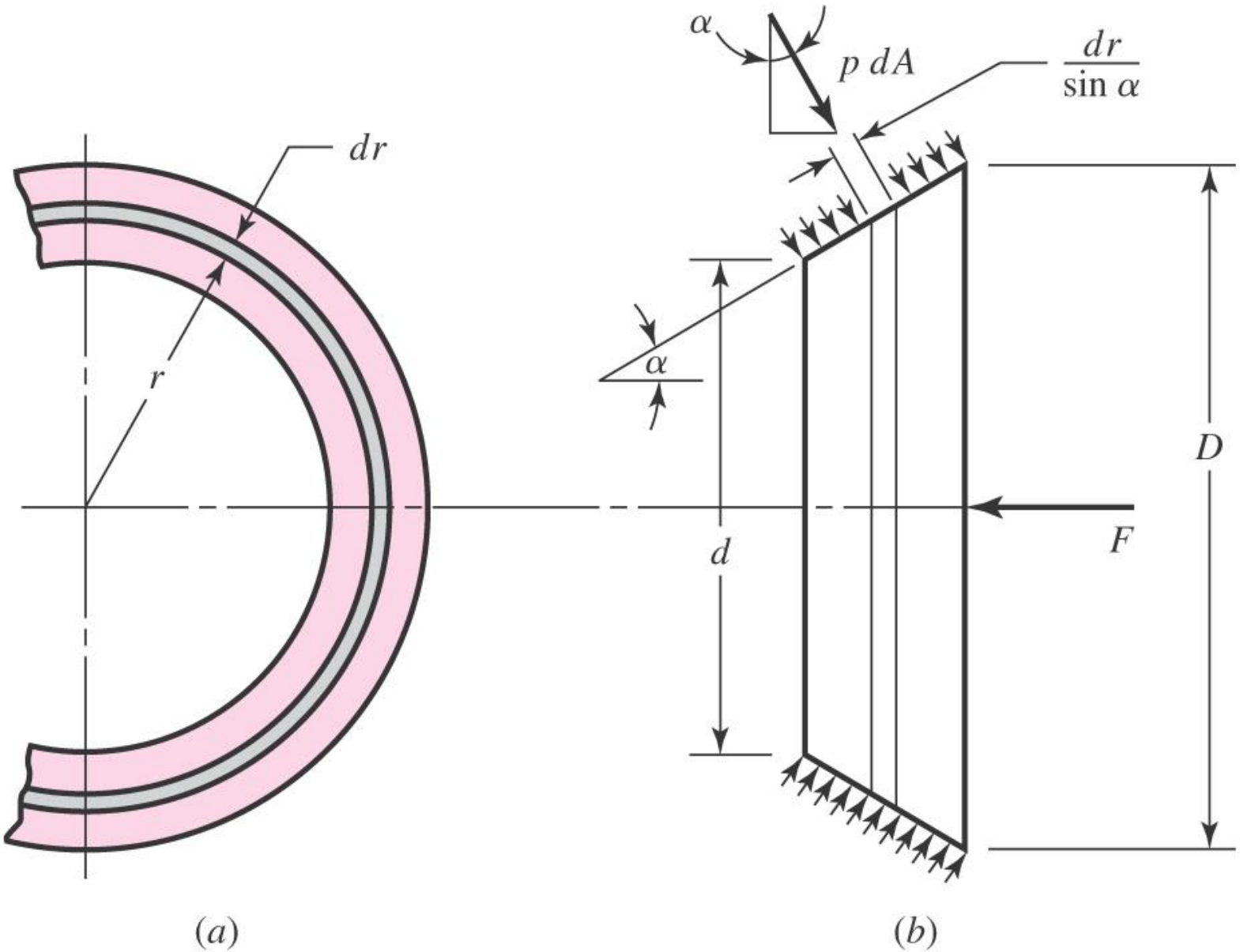

Fig. 16–22

Uniform Wear

$$p = p_a \frac{d}{2r} \qquad (a)$$

$$F = \int p\, dA \sin\alpha = \int_{d/2}^{D/2} \left(p_a \frac{d}{2r}\right)\left(\frac{2\pi r\, dr}{\sin\alpha}\right)(\sin\alpha)$$

$$= \pi p_a d \int_{d/2}^{D/2} dr = \frac{\pi p_a d}{2}(D - d) \qquad (16\text{–}44)$$

$$T = \int r f p\, dA = \int_{d/2}^{D/2} (r f)\left(p_a \frac{d}{2r}\right)\left(\frac{2\pi r\, dr}{\sin\alpha}\right)$$

$$= \frac{\pi f p_a d}{\sin\alpha} \int_{d/2}^{D/2} r\, dr = \frac{\pi f p_a d}{8 \sin\alpha}(D^2 - d^2) \qquad (16\text{–}45)$$

$$T = \frac{F f}{4 \sin\alpha}(D + d) \qquad (16\text{–}46)$$

Uniform Pressure

$$F = \int p_a \, dA \sin\alpha = \int_{d/2}^{D/2} (p_a) \left(\frac{2\pi r \, dr}{\sin\alpha} \right) (\sin\alpha) = \frac{\pi p_a}{4} (D^2 - d^2) \qquad (16\text{–}47)$$

$$T = \int r f p_a \, dA = \int_{d/2}^{D/2} (r f p_a) \left(\frac{2\pi r \, dr}{\sin\alpha} \right) = \frac{\pi f p_a}{12 \sin\alpha} (D^3 - d^3) \qquad (16\text{–}48)$$

$$T = \frac{F f}{3 \sin\alpha} \frac{D^3 - d^3}{D^2 - d^2} \qquad (16\text{–}49)$$

Energy Considerations

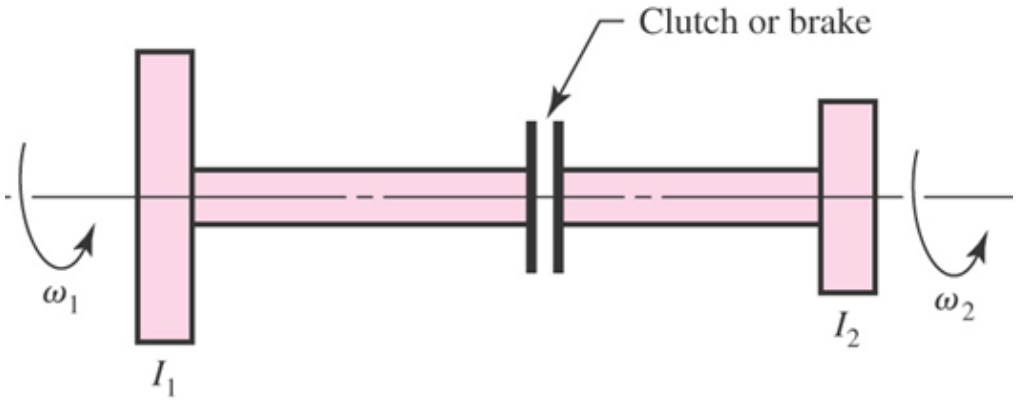

$$I_1\ddot{\theta}_1 = -T \qquad (a)$$

$$I_2\ddot{\theta}_2 = T \qquad (b)$$

$$\dot{\theta}_1 = -\frac{T}{I_1}t + \omega_1 \qquad (c)$$

$$\dot{\theta}_2 = \frac{T}{I_2}t + \omega_2 \qquad (d)$$

$$\dot{\theta} = \dot{\theta}_1 - \dot{\theta}_2 = -\frac{T}{I_1}t + \omega_1 - \left(\frac{T}{I_2}t + \omega_2\right)$$

$$= \omega_1 - \omega_2 - T\left(\frac{I_1 + I_2}{I_1 I_2}\right)t \qquad (16\text{–}50)$$

Energy Considerations

$$t_1 = \frac{I_1 I_2(\omega_1 - \omega_2)}{T(I_1 + I_2)} \tag{16–51}$$

$$u = T\dot{\theta} = T\left[\omega_1 - \omega_2 - T\left(\frac{I_1 + I_2}{I_1 I_2}\right)t\right] \tag{e}$$

$$\begin{aligned} E &= \int_0^{t_1} u\,dt = T\int_0^{t_1}\left[\omega_1 - \omega_2 - T\left(\frac{I_1 + I_2}{I_1 I_2}\right)t\right]dt \\ &= \frac{I_1 I_2(\omega_1 - \omega_2)^2}{2(I_1 + I_2)} \end{aligned} \tag{16–52}$$

$$H = \frac{E}{9336} \tag{16–53}$$

Temperature Rise

$$\Delta T = \frac{H}{C_p W} \tag{16–54}$$

where ΔT = temperature rise, °F

C_p = specific heat capacity, Btu/(lbm · °F); use 0.12 for steel or cast iron

W = mass of clutch or brake parts, lbm

$$\Delta T = \frac{E}{C_p m} \tag{16–55}$$

where ΔT = temperature rise, °C

C_p = specific heat capacity; use 500 J/kg · °C for steel or cast iron

m = mass of clutch or brake parts, kg

Newton's Cooling Model

$$\frac{T - T_\infty}{T_1 - T_\infty} = \exp\left(-\frac{\hbar_{CR} A}{W C_p} t\right) \tag{16–56}$$

where T = temperature at time t, °C

T_1 = initial temperature, °C

T_∞ = environmental temperature, °C

$\hbar_{CR}$ = overall coefficient of heat transfer W/(m^2 · °C)

A = lateral surface area, m^2

W = mass of the object, kg

C_p = specific heat capacity of the object, J/(kg · °C)

Effect of Braking on Temperature

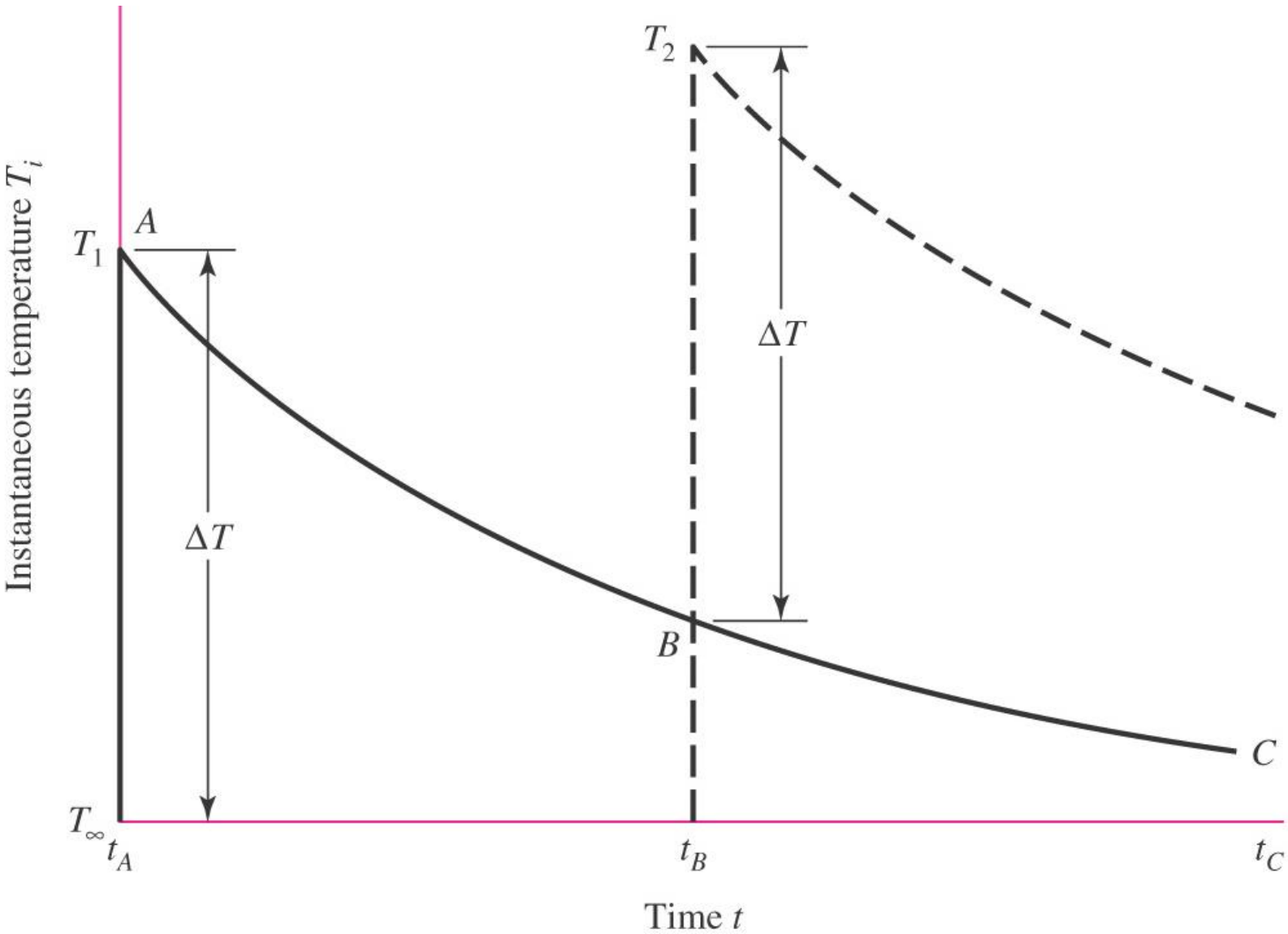

Fig. 16–23

Rate of Heat Transfer

$$H_{\text{loss}} = \hbar_{\text{CR}} A(T - T_\infty) = (h_r + f_v h_c) A(T - T_\infty) \qquad (16\text{–}57)$$

where H_{loss} = rate of energy loss, J/s or W

$\hbar_{\text{CR}}$ = overall coefficient of heat transfer, W/(m^2 · °C)

h_r = radiation component of $\hbar_{\text{CR}}$, W/(m^2 · °C), Fig. 16–24*a*

h_c = convective component of $\hbar_{\text{CR}}$, W/(m^2 · °C), Fig. 16–24*a*

f_v = ventilation factor, Fig. 16–24*b*

T = disk temperature, °C

T_∞ = ambient temperature, °C

Heat-Transfer Coefficient in Still Air

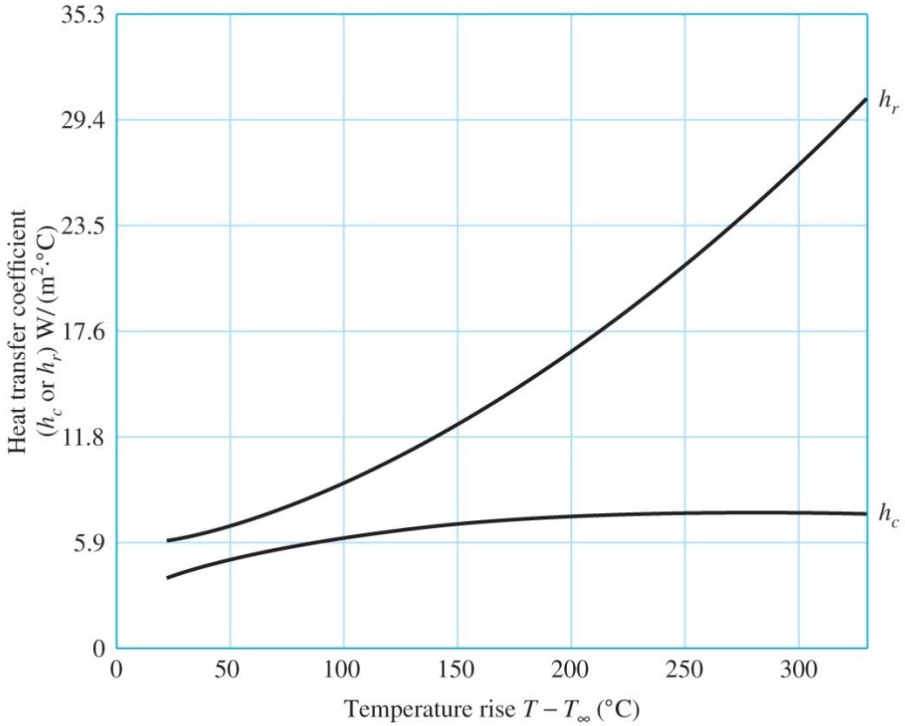

(*a*)

Fig. 16–24*a*

Ventilation Factors

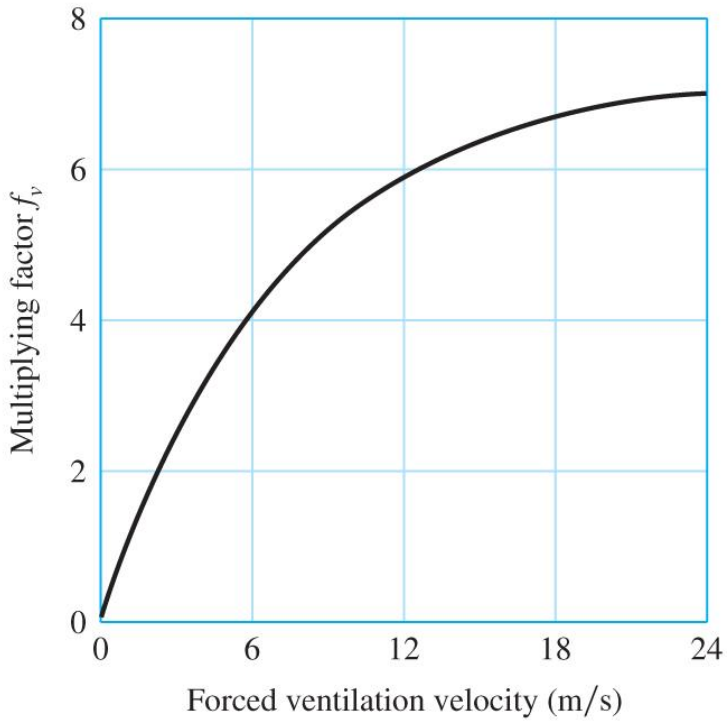

(*b*)

Fig. 16–24*b*

Energy Analysis

$$E = \frac{1}{2}\frac{I}{9336}\left(\omega_o^2 - \omega_f^2\right) \tag{16–58}$$

$$\Delta T = \frac{E}{WC} \tag{16–59}$$

$$\frac{T_{\min} - T_\infty}{T_{\max} - T_\infty} = \exp(-\beta t_1)$$

$$T_{\max} = T_\infty + \frac{\Delta T}{1 - \exp(-\beta t_1)} \tag{16–60}$$

Example 16–5

A caliper brake is used 24 times per hour to arrest a machine shaft from a speed of 250 rev/min to rest. The ventilation of the brake provides a mean air speed of 8 m/s. The equivalent rotary inertia of the machine as seen from the brake shaft is 32 kg · m · s. The disk is steel with a density $\gamma = 7800\ \text{kg/m}^3$, a specific heat capacity of 0.45 kJ/(kg · °C), a diameter of 150 mm, a thickness of 6 mm. The pads are dry sintered metal. The lateral area of the brake surface is 0.032 m^2. Find $T_{\max}$ and $T_{\min}$ for the steady-state operation.

Solution

$$t_1 = 60^2/24 = 150\ \text{s}$$

Assuming a temperature rise of $T_{\max} - T_\infty = 100°\text{C}$, from Fig. 16–24*a*,

$$h_r = 8.8\text{W}/(\text{m}^2 \cdot °\text{C})$$

$$h_c = 5.9\text{W}/(\text{m}^2 \cdot °\text{C})$$

Fig.16–24*b*: $$f_v = 4.8$$

$$\hbar_{\text{CR}} = h_r + f_v h_c = 8.8 + 4.8(5.9) = 37.1\text{W}/(\text{m}^2 \cdot °\text{C})$$

Example 16–5

The mass of the disk is

$$W = \frac{\pi \gamma D^2 h}{4} = \frac{\pi(10)^3 7.8(0.15)^2 0.006}{4} = 0.83 \text{ kg}$$

Eq. (16–58):

$$E = \frac{1}{2} I \left(\omega_o^2 - \omega_f^2\right) = \frac{32}{2}\left(\frac{2\pi}{60}250\right)^2 = 11 \text{ kJ}$$

$$\beta = \frac{\hbar_{\text{CR}} A}{W C_p} = \frac{37.1(0.032)}{0.83(0.45)10^3} = 3.179(10^{-3}) \text{ s}^{-1}$$

Example 16–5

Eq. (16–59): $$\Delta T = \frac{E}{WC_p} = \frac{11}{0.83(0.45)} = 29.5^\circ\text{C}$$

Eq. (16–60): $$T_{\max} = 21 + \frac{29.5}{1 - \exp[-3.179(10^{-3})150]} = 98.8^\circ\text{C}$$ Answer

$$T_{\min} = 98.8 - 29.5 = 69.3^\circ\text{C}$$ Answer

The predicted temperature rise here is $T_{\max} - T_\infty = 77.8^\circ\text{C}$. Iterating with revised values of h_r and h_c from Fig. 16–24*a*, we can make the solution converge to $T_{\max} = 104^\circ\text{C}$ and $T_{\min} = 77^\circ\text{C}$.

Table 16–3 for dry sintered metal pads gives a continuous operating maximum temperature of 300–350°C. There is no danger of overheating.

Area of Friction Material for Average Braking Power

Table 16–2

Area of Friction Material Required for a Given Average Braking Power *Sources:* M. J. Neale, *The Tribology Handbook,* Butterworth, London, 1973; *Friction Materials for Engineers,* Ferodo Ltd., Chapel-en-le-frith, England, 1968.

		Ratio of Area to Average Braking Power, $(10^{-6})m^2/(joules/s)$		
Duty Cycle	**Typical Applications**	**Band and Drum Brakes**	**Plate Disk Brakes**	**Caliper Disk Brakes**
Infrequent	Emergency brakes	52	171	17.1
Intermittent	Elevators, cranes, and winches	171	434	43
Heavy-duty	Excavators, presses	342–422	832	86

Characteristics of Friction Materials

Material	Friction Coefficient f	Maximum Pressure p_{max}, MPa	Maximum Temperature Instantaneous, °C	Maximum Temperature Continuous, °C	Maximum Velocity V_{max}, m/s	Applications
Cermet	0.32	1.0	815	400		Brakes and clutches
Sintered metal (dry)	0.29–0.33	2.1–2.8	500–550	300–350	18	Clutches and caliper disk brakes
Sintered metal (wet)	0.06–0.08	3.4	500	300	18	Clutches
Rigid molded asbestos (dry)	0.35–0.41	0.7	350–400	180	18	Drum brakes and clutches
Rigid molded asbestos (wet)	0.06	2.1	350	180	18	Industrial clutches
Rigid molded asbestos pads	0.31–0.49	5.2	500–750	230–350	24	Disk brakes
Rigid molded nonasbestos	0.33–0.63	0.7–1.0		260–400	24–38	Clutches and brakes
Semirigid molded asbestos	0.37–0.41	0.7	350	150	18	Clutches and brakes
Flexible molded asbestos	0.39–0.45	0.7	350–400	150–180	18	Clutches and brakes
Wound asbestos yarn and wire	0.38	0.7	350	150	18	Vehicle clutches
Woven asbestos yarn and wire	0.38	0.7	260	130	18	Industrial clutches and brakes
Woven cotton	0.47	0.7	110	75	18	Industrial clutches and brakes
Resilient paper (wet)	0.09–0.15	2.8	150		$PV < 18$ MPa · m/s	Clutches and transmission bands

Table 16–3

Some Properties of Brake Linings

	Woven Lining	Molded Lining	Rigid Block
Compressive strength, kpsi	10–15	10–18	10–15
Compressive strength, MPa	70–100	70–125	70–100
Tensile strength, kpsi	2.5–3	4–5	3–4
Tensile strength, MPa	17–21	27–35	21–27
Max. temperature, °F	400–500	500	750
Max. temperature, °C	200–260	260	400
Max. speed, ft/min	7500	5000	7500
Max. speed, m/s	38	25	38
Max. pressure, psi	50–100	100	150
Max. pressure, kPa	340–690	690	1000
Frictional coefficient, mean	0.45	0.47	0.40–45

Table 16–4

Friction Materials for Clutches

Table 16–5

Friction Materials for Clutches

Material	Friction Coefficient Wet	Friction Coefficient Dry	Max. Temperature °F	Max. Temperature °C	Max. Pressure psi	Max. Pressure kPa
Cast iron on cast iron	0.05	0.15–0.20	600	320	150–250	1000–1750
Powdered metal* on cast iron	0.05–0.1	0.1–0.4	1000	540	150	1000
Powdered metal* on hard steel	0.05–0.1	0.1–0.3	1000	540	300	2100
Wood on steel or cast iron	0.16	0.2–0.35	300	150	60–90	400–620
Leather on steel or cast iron	0.12	0.3–0.5	200	100	10–40	70–280
Cork on steel or cast iron	0.15–0.25	0.3–0.5	200	100	8–14	50–100
Felt on steel or cast iron	0.18	0.22	280	140	5–10	35–70
Woven asbestos* on steel or cast iron	0.1–0.2	0.3–0.6	350–500	175–260	50–100	350–700
Molded asbestos* on steel or cast iron	0.08–0.12	0.2–0.5	500	260	50–150	350–1000
Impregnated asbestos* on steel or cast iron	0.12	0.32	500–750	260–400	150	1000
Carbon graphite on steel	0.05–0.1	0.25	700–1000	370–540	300	2100

Positive-Contact Clutches

- Characteristics of positive-contact clutches
  - No slip
  - No heat generated
  - Cannot be engaged at high speeds
  - Sometimes cannot be engaged when both shafts are at rest
  - Engagement is accompanied by shock

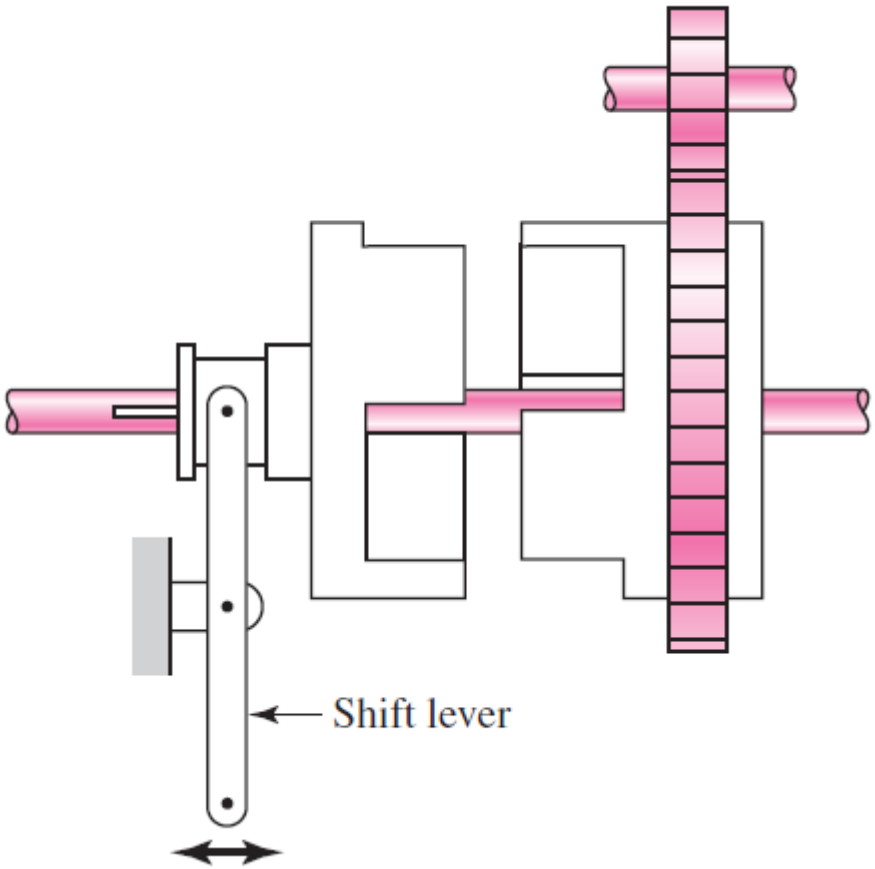

Square-jaw Clutch

Fig. 16–25*a*

Overload Release Clutch

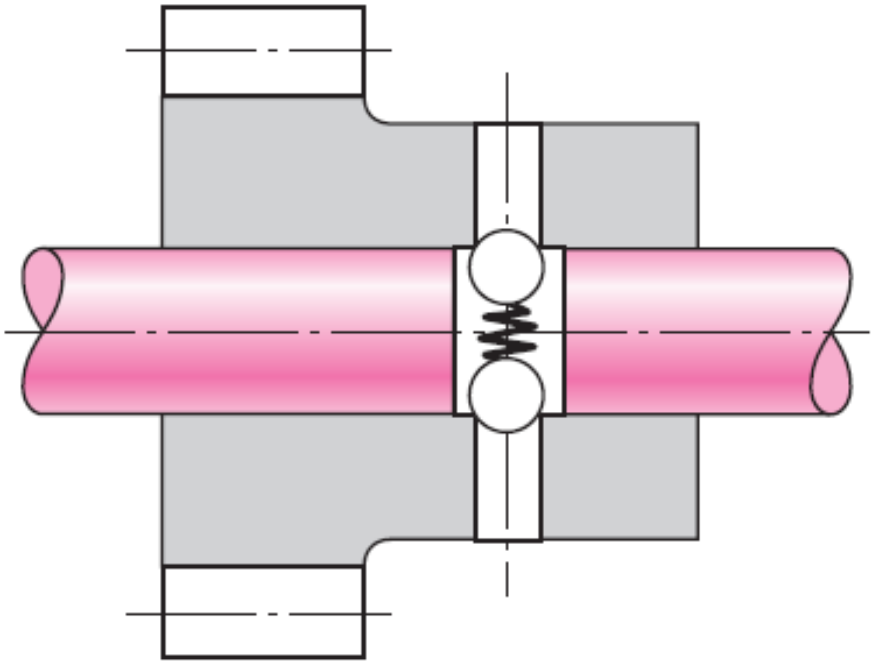

Fig. 16–25*b*

Shaft Couplings

Figure 16–26

Shaft couplings. (*a*) Plain. (*b*) Light-duty toothed coupling. (*c*) BOST-FLEX® through-bore design having elastomer insert to transmit torque by compression; insert permits 1° misalignment. (*d*) Three-jaw coupling available with bronze, rubber, or polyurethane insert to minimize vibration. *(Reproduced by permission, Boston Gear Division, Colfax Corp.)*

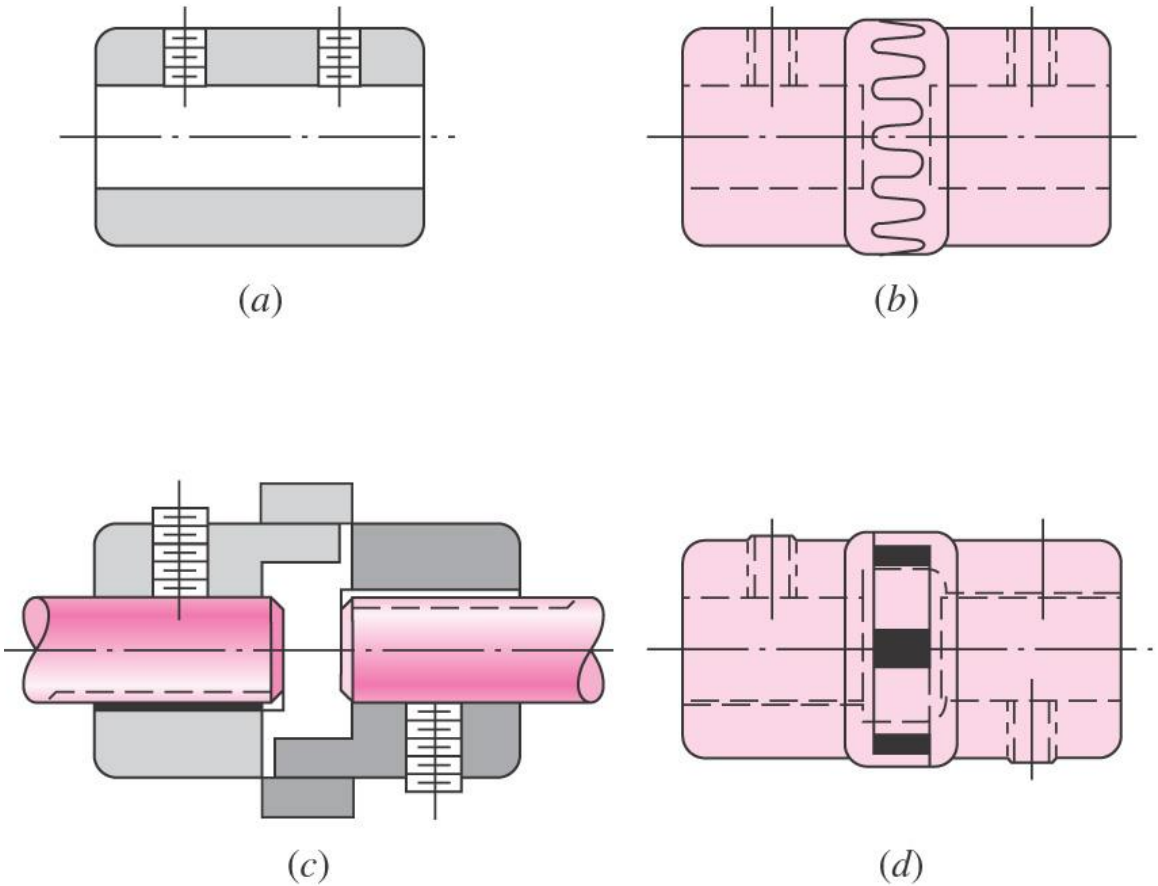

Fig. 16–26

Flywheels

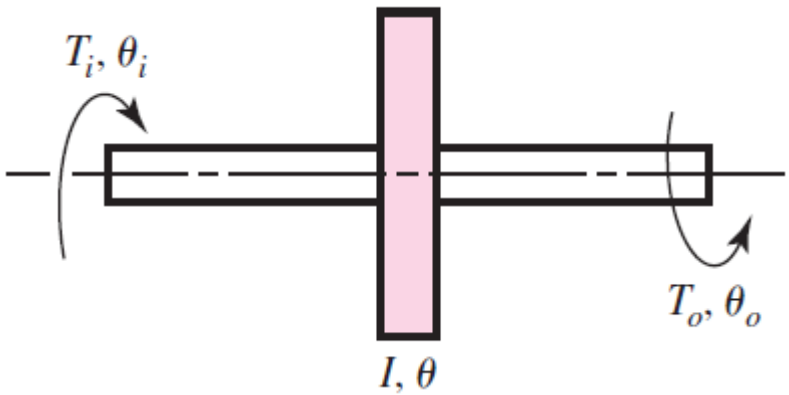

$$\sum M = T_i(\theta_i, \dot{\theta}_i) - T_o(\theta_o, \dot{\theta}_o) - I\ddot{\theta} = 0$$

$$I\ddot{\theta} = T_i(\theta_i, \omega_i) - T_o(\theta_o, \omega_o) \qquad (a)$$

$$I\ddot{\theta} = T_i(\theta, \omega) - T_o(\theta, \omega) \qquad (b)$$

Hypothetical Flywheel Case

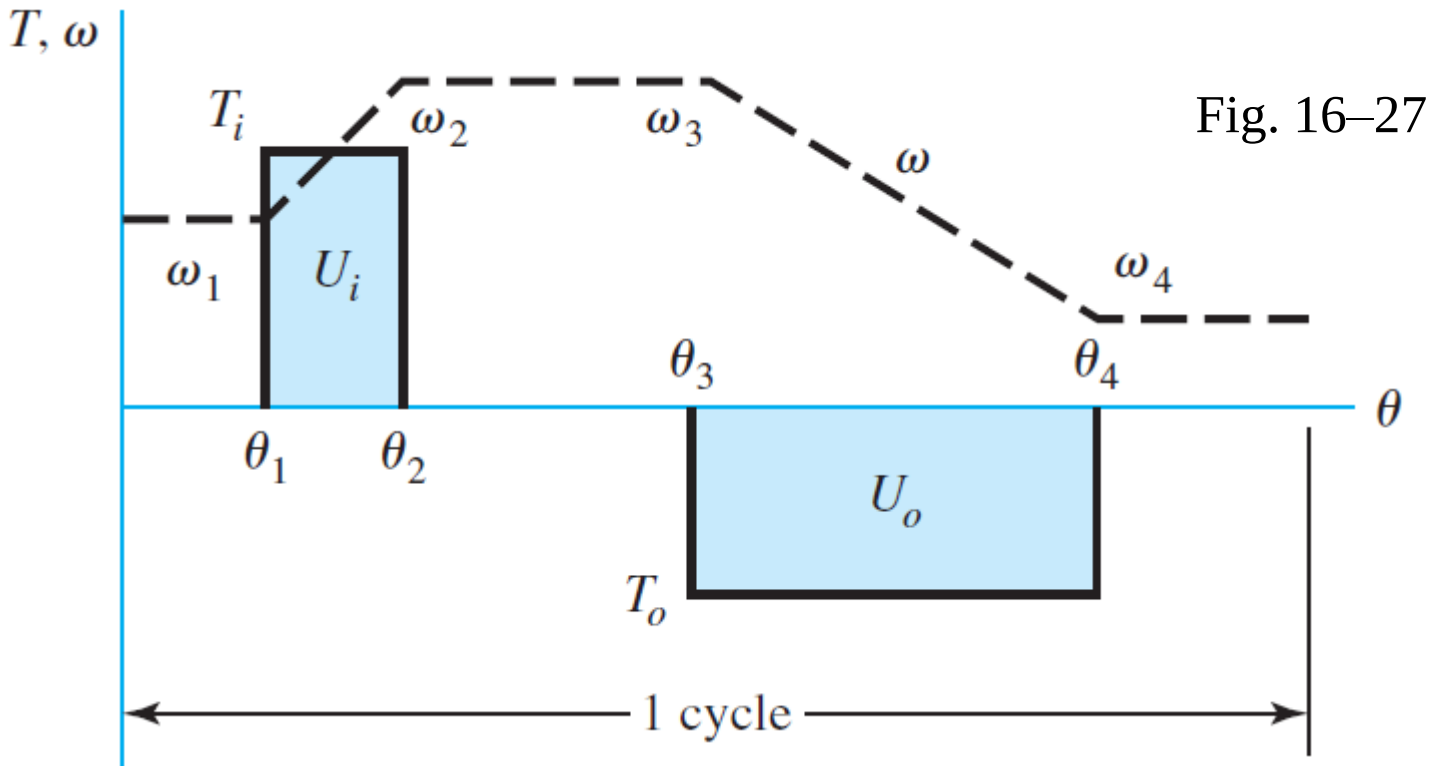

Fig. 16–27

$$U_i = T_i(\theta_2 - \theta_1) \qquad (c)$$

$$U_o = T_o(\theta_4 - \theta_3) \qquad (d)$$

Kinetic Energy

$$E_1 = \frac{1}{2} I \omega_1^2 \qquad (e)$$

$$E_2 = \frac{1}{2} I \omega_2^2 \qquad (f)$$

$$E_2 - E_1 = \frac{1}{2} I \left(\omega_2^2 - \omega_1^2\right) \qquad (16\text{–}61)$$

Engine Torque for One Cylinder Cycle

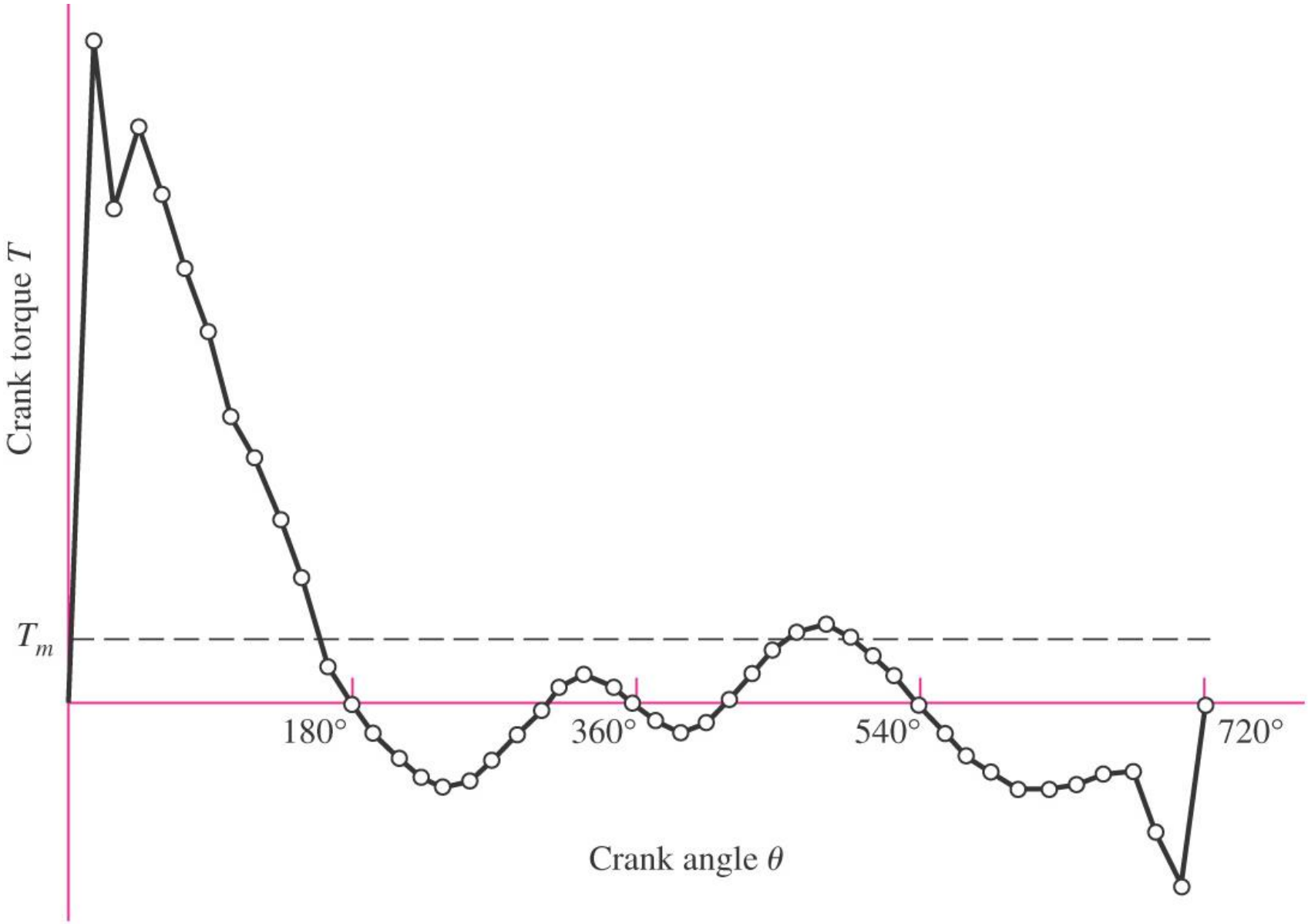

Fig. 16–28

Coefficient of Speed Fluctuation, C_s

$$C_s = \frac{\omega_2 - \omega_1}{\omega} \qquad (16\text{–}62)$$

$$\omega = \frac{\omega_2 + \omega_1}{2} \qquad (16\text{–}63)$$

Energy Change

$$E_2 - E_1 = \frac{1}{2} I \left(\omega_2^2 - \omega_1^2\right) \qquad (16\text{–}61)$$

$$E_2 - E_1 = \frac{I}{2}(\omega_2 - \omega_1)(\omega_2 + \omega_1)$$

$$\omega_2 - \omega_1 = C_s \omega \text{ and } \omega_2 + \omega_1 = 2\omega$$

$$E_2 - E_1 = C_s I \omega^2 \qquad (16\text{–}64)$$

Example 16–6

Table 16–6 lists values of the torque used to plot Fig. 16–28. The nominal speed of the engine is to be 250 rad/s.

(*a*) Integrate the torque-displacement function for one cycle and find the energy that can be delivered to a load during the cycle.

(*b*) Determine the mean torque T_m (see Fig. 16–28).

(*c*) The greatest energy fluctuation is approximately between $\theta = 15°$ and $\theta = 150°$ on the torque diagram; see Fig. 16–28 and note that $T_o = -T_m$. Using a coefficient of speed fluctuation $C_s = 0.1$, find a suitable value for the flywheel inertia.

(*d*) Find ω_2 and ω_1.

Solution

(*a*) Using $n = 48$ intervals of $\Delta\theta = 4\pi/48$, numerical integration of the data of Table 16–6 yields $E = 388$ J. This is the energy that can be delivered to the load.

Example 16–6

θ, deg	T, N · m	θ, deg	T, N · m	θ, deg	T, N · m	θ, deg	T, N · m
0	0	195	–12	375	–9	555	–12
15	316	210	–23	390	–14	570	–23
30	236	225	–29	405	–10	585	–33
45	275	240	–36	420	0.9	600	–40
60	244	255	–35	435	14	615	–42
75	208	270	–27	450	27	630	–41
90	180	285	–14	465	35	645	–35
105	137	300	–0.9	480	36	660	–30
120	120	315	10	495	29	675	–31
135	91	330	14	510	23	690	–62
150	60	345	9	525	12	705	–86
165	21	360	0	540	0	720	0
180	0						

Table 16–6

Example 16–6

(*b*) $$T_m = \frac{388}{4\pi} = 30.9 \text{ N} \cdot \text{m}$$

(*c*) The largest positive loop on the torque-displacement diagram occurs between $\theta = 0°$ and $\theta = 180°$. We select this loop as yielding the largest speed change. Subtracting 30.9 N · m from the values in Table 16–6 for this loop gives, respectively, −30.9, 29.3, 21.1, 25.0, 21.9, 18.2, 15.3, 10.9, 9.2, 6.2, 3.1,−1.0, and −30.9 N · m. Numerically integrating $T - T_m$ with respect to θ yields $E_2 - E_1 = 408$ J. We now solve Eq. (16–64) for *I*. This gives

$$I = \frac{E_2 - E_1}{C_s \omega^2} = \frac{408}{0.1(250)^2} = 0.065 \text{ kg} \cdot \text{s}^2 \text{ m}$$

(*d*) Equations (16–62) and (16–63) can be solved simultaneously for ω_2 and ω_1. Substituting appropriate values in these two equations yields

$$\omega_2 = \frac{\omega}{2}(2 + C_s) = \frac{250}{2}(2 + 0.1) = 262.5 \text{ rad/s}$$

$$\omega_1 = 2\omega - \omega_2 = 2(250) - 262.5 = 237.5 \text{ rad/s}$$

These two speeds occur at $\theta = 180°$ and $\theta = 0°$, respectively.

Punch-Press Torque Demand

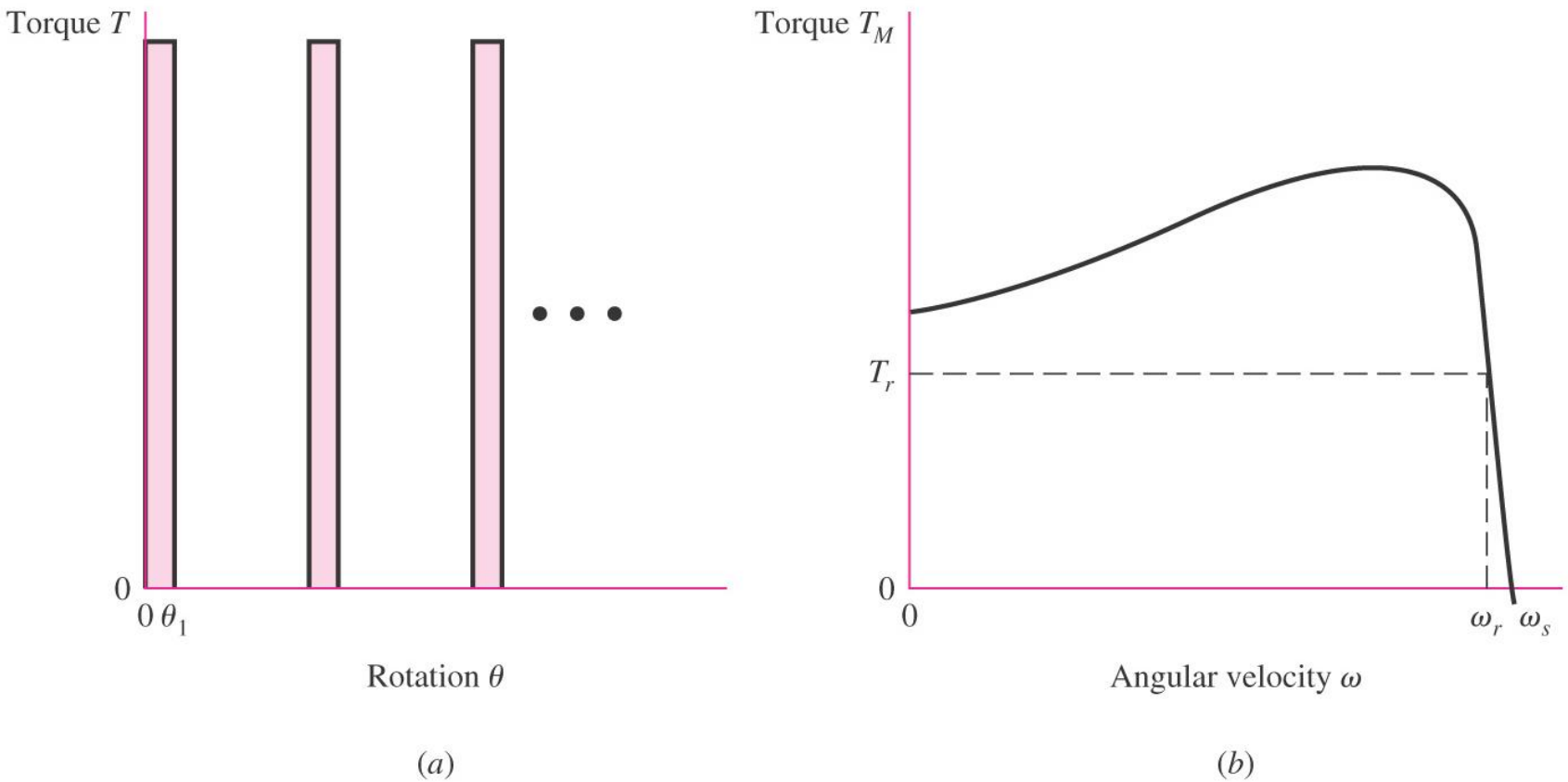

Fig. 16–29

Punch-Press Analysis

$$T(\theta_1 - 0) = \frac{1}{2} I \left(\omega_1^2 - \omega_2^2\right) = E_2 - E_1$$

$$W = \int_{\theta_1}^{\theta_2} [T(\theta) - T]\, d\theta = \frac{1}{2} I \left(\omega_{\max}^2 - \omega_{\min}^2\right)$$

$$W = \frac{1}{2} I \left(\omega_{\max}^2 - \omega_{\min}^2\right) = \frac{I}{2} (\omega_{\max} - \omega_{\min})\,(\omega_{\max} + \omega_{\min})$$

$$= \frac{I}{2} (C_s \bar{\omega})(2\omega_0) = I C_s \bar{\omega} \omega_0$$

When the speed fluctuation is low,

$$\omega_0 \doteq \bar{\omega}, \text{ and}$$

$$I = \frac{W}{C_s \bar{\omega}^2}$$

Induction Motor Characteristics

$$T = a\omega + b$$

$$a = \frac{T_r - T_s}{\omega_r - \omega_s} = \frac{T_r}{\omega_r - \omega_s} = -\frac{T_r}{\omega_s - \omega_r}$$

$$b = \frac{T_r\omega_s - T_s\omega_r}{\omega_s - \omega_r} = \frac{T_r\omega_s}{\omega_s - \omega_r} \qquad (16\text{–}65)$$

Induction Motor Characteristics

Acceleration:

$$I\ddot{\theta} = T_M \text{ (i.e., } T\,d\omega/dt = T_M\text{)}$$

$$\int_{t_1}^{t_2} dt = \int_{\omega_r}^{\omega_2} \frac{I\,d\omega}{T_M} = I\int_{\omega_r}^{\omega_2} \frac{d\omega}{a\omega + b} = \frac{I}{a}\ln\frac{a\omega_2 + b}{a\omega_r + b} = \frac{I}{a}\ln\frac{T_2}{T_r}$$

$$t_2 - t_1 = \frac{I}{a}\ln\frac{T_2}{T_r} \qquad (16\text{–}66)$$

Deceleration:

$$\int_0^{t_1} dt = I\int_{\omega_2}^{\omega_r} \frac{d\omega}{T_M - T_L} = I\int_{\omega_2}^{\omega_r} \frac{d\omega}{a\omega + b - T_L} = \frac{I}{a}\ln\frac{a\omega_r + b - T_L}{a\omega_2 + b - T_L}$$

$$t_1 = \frac{I}{a}\ln\frac{T_r - T_L}{T_2 - T_L} \qquad (16\text{–}67)$$

Induction Motor Characteristics

$$\frac{T_2}{T_r} = \left(\frac{T_L - T_r}{T_L - T_2}\right)^{(t_2 - t_1)/t_1} \qquad (16\text{–}68)$$

$$I = \frac{a(t_2 - t_1)}{\ln(T_2/T_r)} \qquad (16\text{–}69)$$